sun microsystems

Sun SunNet Ethernet/VME Controller Installation Manual for 56-Inch Data Center Cabinets

Part No: 813-1068-10
Revision A of 26 September 1989

Sun SunNet Ethernet/VME Controller Installation Manual for 56-Inch Data Center Cabinets

Sun Microsystems, Inc. • 2550 Garcia Avenue • Mountain View, CA 94043 • 415-960-1300

Part No: 813-1068-10
Revision A of 26 September 1989

CAUTION

This equipment generates, uses, and can radiate radio frequency energy and if not installed and used in accordance with the instructions manual, may cause interference to radio communications. It has been tested and found to comply with the limits for a Class A computing device pursuant to Subpart J of Part 15 of FCC Rules, which are designed to provide reasonable protection against such interference when operated in a commercial environment. Operation of this equipment in a residential area is likely to cause interference in which case the user at his own expense will be required to take whatever measures may be required to correct the interference.

This digital apparatus does not exceed the Class A limits for radio noise emissions from digital apparatus set out in the Radio Interference Regulations of the Canadian Department of Communications.

Le présent appareil numérique n'émet pas de bruits radioélectriques dépassant les limites applicables aux appareils numériques de la classe A prescrites dans le Règlement sur le brouillage radioélectrique édicté par le ministère des Communications du Canada.

Contents

Tables

Preface

This manual contains procedures for installing the Sun SunNet Ethernet/VME controller in a 56-inch data center cabinet. Slot assignments are covered in a separate document that came with your cabinet.

Summary of Contents

The manual is organized as follows:

Chapter 1

Unpacking and Inspection– Offers brief guidelines on unpacking the board. Read this if you are installing a controller that is supplied by itself.

Chapter 2

Installation– Provides instructions on how to install the board in a 56-inch cabinet. Read this to install or to remove and replace the controller.

Related Documentation

For various stages of the installation process, it is advisable to have these documents on hand:

- *Sun SunNet Ethernet/VME Controller Configuration Procedures (Part No. 813-2082)*
- Installation manuals for the cabinet and logic enclosure
- Slot assignment manual for the system
- Release manual for the version of SunOS for your system

sun microsystems

IPI8-1000 1 Gigabyte Disk Drive Installation Procedures for the Sun 56-inch Cabinets

Part No: 813–1051–10
Revision: A of 26 September 1989

2

Installation

2.1. General Description

The SunNet controller is a VMEbus slave device that provides an Ethernet interface. The Ethernet interface is based on the Intel 82586 Ethernet Controller. It holds 128 kilobytes of on-board buffer memory, and can transfer data from the Ethernet into the on-board buffer memory at a maximum (estimated) rate of 5.3 megabytes per second.

NOTE *The SunNet Ethernet/VME controller is designed to be used with a Level 2 external Ethernet Transceiver*

These are the maximum power requirements for this board:

- Active: 4.0 Amps @ +5 VDC, 20.00 watts

NOTE *This board does not include a licensed Ethernet address. An Ethernet address must be downloaded to the Ethernet circuits in this board.*

2.2. Installation

The following paragraphs describe board installation in a 56-inch cabinet. If the server is previously installed, the process begins by halting SunOS and turning off system power to the cardcage. Then, a cardcage slot is selected to house the board. (If you are replacing a board, refer to Section 2.7, which explains how to remove the existing board.)

Ensure the correct configuration by refering to the *Sun SunNet Ethernet/VME Controller Configuration Procedure* (Part No. 813-2082) and follow the procedures outlined there for configuring the board.

The next step is installing the board in the cardcage. Once the board is installed, you can power-up and reboot.

Tools Needed

To complete this procedure, you will need:

- 2mm (or 5/64 inch) Allen (hex) wrench to remove and secure the boards in the cardcage
- Antistatic wrist strap (included in the ESD Kit, Part No. 800-2226)

2.3. Preliminary Installation Steps

1. In single-user mode, login as root, then halt the operating system by entering the following command:

   ```
   /etc/halt
   ```

   In multi-user mode, enter the `shutdown` command to give any users on the system a chance to logoff:

   ```
   /etc/shutdown -h now
   ```

CAUTION **You MUST halt SunOS before turning off the system power or damage to the operating system may result.**

2. When SunOS is halted, turn off the power switch on the power supply. At this point, all system fans should stop, and all LED (Light Emitting Diode) indicators on the rear panel of any boards should be dark. Leave the server plugged in.
3. Access the card cage according to the instructions in the server enclosure manual.

CAUTION **An anti-static wrist strap should be attached to your wrist and to a bare-metal portion of the system chassis before handling the board or any chips. Permanent damage to the chips could occur if you fail to do so. Remove the memory board from its anti-static bag only if you are ready to install it.**

4. Select the cardcage slot to install the board. Refer to the cardcage slot assignment manual you received with your system.
5. Remove the two small metric cap screws that secure the end plate to the cardcage slot(s) selected, using the Allen wrench. Save the screws for reinstallation. See the cardcage slot assignment manual for further information.
6. If present, remove the air restriction panel.

2.4. Verify Board Configuration

Verify board configuration according to the instructions found in *Sun SunNet Ethernet/VME Controller Configuration Procedures*, Part No. 813-2082.

2.5. Installation

After checking, and, if necessary, reconfiguring the DIP-switches, install the board.

CAUTION **Installation of a board WITHOUT springfingers may increase RFI emissions and jeopardize FCC compliance. Sun Microsystems will not be responsible for FCC compliance if non-springfingered boards are added to a system originally shipped WITH springfingers and FCC approval.**

Springfingers are metal strips that are installed between the edge of the PC board and the outer panel to reduce RFI emissions. Serrated metal "fingers" protrude from either side of the strip.

If a board WITH springfingers is installed next to a board WITHOUT springfingers, the insulator shield on the outside of the fingers MUST be present to prevent possible shorting of component leads to the springfingers.

If a cardcage contains boards WITH and WITHOUT springfingers, use the following guidelines:

- **Before removing a board WITHOUT springfingers, remove the board below it (or to the left of it for pedestal systems) if that board is equipped WITH springfingers and an outer insulator shield.**
- **Always install a board WITHOUT springfingers first, and then replace the board WITH springfingers and insulator shield in the slot below it (or to the left of it).**

If a board WITH springfingers is installed next to a board or filler panel also equipped WITH springfingers, the outside insulator shields should be removed.

Ensure that the insulator strip between the inner side of the springfingers and the PC board is intact at all times.

When removing and replacing boards with springfingers, check the condition of the insulator strip/shield(s) and replace if damaged. Call 800-USA-4SUN (in the U.S.) or contact your local Sun sales or service organization to ask questions and to obtain additional insulator strips or shields.

1. Holding the board assembly by its edges, carefully slide it into the cardcage slot. Seat the connector firmly using both hands if necessary.

CAUTION **DO NOT FORCE the board into a slot — you may damage it. It should insert and seat smoothly. If it binds, remove it, and inspect the cardcage slot for any obvious obstructions. Also inspect both the board and the backplane for damage. Correct the problems before attempting to reinsert the board.**

2. Replace the two previously removed metric cap screws in either end of the board's rear panel. Tighten.
3. Connect the system Ethernet cable to the connector on the board's rear panel by positioning the male connector in the female socket, then pushing the connector clip up, until it engages. Note that Table 2-1 lists Ethernet connector pins.
4. Reconfigure the logic enclosure back plane to reflect the installation of the SunNet Ethernet/VME controller. See the slot assignment manual for your system.

Table 2-1 *Ethernet Connector Pins*

Pin	*Signal*
1	Open
2	P4.CLSN+
3	P4.TXD+
4	Open
5	P4.RXD+ (fused)
6	Gnd
7	Vcc (jumpered)
8	Open
9	P4.CLSN–
10	P4.TXD–
11	Open
12	P4.RXD–
13	12V (fused)
14	Open
15	Open

2.6. After the Board is Installed

Turn on the system power and allow the system to boot completely. When the boot process is successfully completed, the console display should show the login prompt.

Once board installation is complete and the server is powered up, the hardware automatically assigns memory locations, according to the DIP-switch configuration selected.

2.7. Removing a Board

Use this section if you need to remove a board or to move a board from its slot for any purpose.

CAUTION **Read the anti-static guidelines in Chapter 1 if you have not already done so.**

1. Ensure the system is off. Refer to section 2.3 for instructions to halt the operating system.
2. Access the cardcage according to the instructions in your system enclosure manual.
3. Remove the two small metric cap screws that secure the board in the cardcage slot.
4. Gently pry the ejector levers outwards; the board should pop out about ½ inch.

IPI8-1000 1 Gigabyte Disk Drive Installation Procedures for the Sun 56-inch Cabinets

Sun Microsystems, Inc. • 2550 Garcia Avenue • Mountain View, CA 94043 • 415-960-1300

Part No: 813–1051–10
Revision: A of 26 September 1989

Revision History

Dash Number	*Revision*	*Date*	*Comments*
10	*A*	26 September 1989	First Customer Shipment

Contents

Content

Did this guide meet your needs? If not, please indicate what you think should be added or deleted in order to do so. Please comment on any material that you feel should be present but is not. Is there material found in other manuals that would be more convenient if it were in this manual?

Layout and Style

Did you find the organization of this guide useful? If not, how would you rearrange things? Do you find the style of this manual pleasing or irritating? What would you like to see different?

Mail this completed form to:

Manager, SSD Technical Publications
Sun Microsystems, Inc.
2550 Garcia Avenue
Mountain View, CA 94043

Tables

Corporate Headquarters
Sun Microsystems, Inc.
2550 Garcia Avenue
Mountain View, CA 94043
415 960-1300
TLX 37-29639

For U.S. Sales Office locations, call:
800 821-4643
In CA: 800 821-4642

European Headquarters
Sun Microsystems Europe, Inc.
Bagshot Manor, Green Lane
Bagshot, Surrey GU19 5NL
England
0276 51440
TLX 859017

Australia: (02) 413 2666
Canada: 416 477-6745
France: (1) 40 94 80 00
Germany: (089) 95094-0
Hong Kong: 852 5-8651688
Italy: (39) 6056337
Japan: (03) 221-7021
Korea: 2-7802255
Nordic Countries: + 46 (0)8 7647810
PRC: 1-8315568
Singapore: 224 3388
Spain: (1) 2532003
Switzerland: (1) 8289555
The Netherlands: 3133501234
Taiwan: 2-7213257
UK: 0276 62111

Europe, Middle East, and Africa, call European Headquarters:
0276 51440

Elsewhere in the world, call Corporate Headquarters:
415 960-1300
Intercontinental Sales

Preface

The Sun IPI8-1000 1 gigabyte disk drive is an eight-inch, high-performance, rack-mountable disk drive with a formatted capacity of 1 gigabyte. This drive interfaces to the host using Sun's ISP-80 Disk Drive Controller.

This document and those documents listed in the following table, provide the information necessary to unpack, configure and install the disk drive into a Sun 56-inch Data Center or Expansion Cabinet.

List of Applicable Documents

Refer to the following documents for additional helpful information.

NOTE *Note that in the following table, various installation and system administration manuals are listed. In practice, you will need to reference just those manuals that apply to your host system.*

Table 0-1 *List of Applicable Documents*

Part Number	Description
813-2065-xx	ISP-80 Disk Controller Configuration Procedures
813-1050-xx	ISP-80 Disk Controller Installation Procedures for the Sun 56-inch Cabinets
813-2066-xx	IPI8-1000 1 Gigabyte Disk Drive Configuration Procedures
813-2067-xx or 813-2004-xx	SPARCServer 390 Card Cage Slot Assignments and Backplane Configuration Procedures Card Cage Slot Assignments and Backplane Configuration Procedures
Software Release SunOS 4.0.3 with the SPARC 4/390 Feature Tape (or a more recent version of SunOS) for Sun-4	System Administration for the Sun Workstation
800-3242-xx	Sun 56-Inch Data Center Cabinet and Data Center Expansion Cabinet Installation Manual
800-3259-xx	Sun 56-Inch Data Center Cabinet and Data Center Expansion Cabinet Field Service Manual
800-3265-xx	16-Slot Logic Enclosure Field Service Manual
800-3264-xx	16-Slot Logic Enclosure Installation Manual

1

Inspection and Unpacking

1

Inspection and Unpacking

1.1. Inspection

When you receive your shipment, inspect all shipping cartons *immediately* for any evidence of damage. If any carton is severely damaged, request that the carrier's agent be present when the carton is opened. If the carrier's agent is not present when a carton is opened, and the contents are found to be damaged, keep all contents and packing materials for the agent's inspection.

1.2. Unpacking — General

NOTE *If you received your disk drive preinstalled in a Sun 56-inch cabinet, you may ignore Chapters 1 through 7. Please skip to Chapter 8.*

NOTE *Save all the shipping cartons that came with your disk drive for possible future use.*

1.3. Unpacking the Disk Drive

When unpacking the drive, be sure to keep the following information in mind.

WARNING ***The drive (with power supply) weighs approximately 50 lbs (23 kg). Use safe lifting practices to install and remove the drive from the 56-inch cabinet and when removing the drive from the shipping container.***

CAUTION **When lifting the disk drive, *DO NOT* lift the drive by the plastic front cover. Lift the drive by its sides.**

CAUTION **The disk drive may *never* be stored in an upside-down position.**

CAUTION **A sudden reduction in the temperature of a drive during unpacking may cause condensation inside the unit. It is therefore recommended that the drive remain in its packing carton at the installation site until its temperature matches that of the installation site. The following is a guide to how long you should wait before unpacking a drive.**

0° C — 6 hours
-10° C — 9 hours
-20° C — 11 hours.

NOTE *Move the disk drive slowly and carefully to avoid jostling and bumping the drive. Do not tilt the drive during unpacking.*

Be sure that you have removed all accessories from the disk drive shipping carton before storing the carton for future use. If no damage is found, go on to Chapter 2.

2

General Description and Cautions

Figures

2

General Description and Cautions

2.1. Physical Orientation

When referring to the disk drive, all directions (such as top, bottom, left and right) are given as though looking at the drive's front panel (unless stated otherwise).

2.2. General Description

The Sun IPI8-1000 1 gigabyte disk drive is a state-of-the-art Winchester technology disk drive that utilizes a servo-controlled actuator and high-resolution heads and media. The combination of these technologies makes possible the achievement of minimal access times (16 ms avg.), high recording density, and a high data transfer rate (3.0 megabytes/s).

These disk drives use the Intelligent Peripheral Interface (IPI). Two of these eight-inch disk drives can easily fit side-by-side into a Sun 19-inch wide, 56-inch high cabinet.

A single drive gives you one gigabyte of storage (fully formatted capacity) in a small, high-speed, high-performance package.

Table 2-1 *IPI8-1000 1 Gigabyte Disk Drive Electrical Requirements*

Electrical Specifications	
Specifications	**Nominal Values**
	208–240 VAC
Voltage Range	177 to 264 VAC
Line Frequency	50/60 Hz
Frequency Range	48 to 62 Hz
Phase	Single
Power Consumed @startup* *@ power standby*	143 to 147 Watts 95 to 105 Watts
*Line Current**	1.5 to 1.4 Amps
*Power Factor**	0.46 to 0.44
BTU 208/240	488 to 501

* Nominal values with disks rotating and carriage moving.

2.3. Cautions

WARNING ***Exercise great care when following the procedures described in this document. Because of the substantial weight of the disk drive, serious personal injury and/or equipment damage could result from carelessness or a failure to follow the procedures.***

Observe common-sense safety precautions as you would for any electrical or electronic equipment. Always power down the system and disconnect the power cord before opening any cabinets.

Please refer all servicing not described in this document to qualified service personnel. If in doubt, call your local sales or field service representative.

3

Preparing the 56-inch Cabinet for Installation

3

Preparing the 56-inch Cabinet for Installation

The information contained in this chapter and Chapter 4 — *Disk Drive Installation* is oriented towards installing the disk drive into a Sun 56-inch high, 19″-wide Data Center or Expansion Cabinet.

CAUTION **When you are performing any of the procedures described in this manual, it is particularly important that you use SAE 10-32 screws to attach anything to the 56-inch cabinet mounting rails. Use of any screw except an SAE 10-32 screw will permanently damage these rails.**

3.1. Tools Required

A #2 Phillips-head screwdriver is required to install the slide rails onto the 56-inch cabinet mounting rails. The total length (handle and shaft) should not exceed 9 inches.

3.2. Sun 56-inch Cabinet Front Panel Removal

Disk drives should always be placed in the 56-inch cabinet starting from the bottom. If no more than four drives are to be installed in the 56-inch cabinet, you will only need to remove the bottom-most of the four plastic front panels to gain access to this lowest part. This panel is easy to remove and replace. To remove it, place one hand on each side of the panel and pull gently straight out from the front of the 56-inch cabinet. The panel should snap easily off the four ball studs on which it is mounted. Set this panel aside, for now.

In addition, you'll need to remove the rear perforated panel from the back of the 56-inch cabinet. To do this, remove the 8 Phillips-head screws which secure this panel to the rear of the 56-inch cabinet, and remove the panel. Set the screws and the panel aside for now.

If you plan to install more than four drives in the 56-inch cabinet. you will need to remove as many of the other appropriate front panels as necessary. Remember that disk drives are to be installed from the bottom up, so you'll want to remove the panels from the bottom up. The other panels can be removed in the same manner as the first panel, described in the paragraph above.

3.3. Guidelines for Mounting the Slide Rails to the 56-Inch Cabinet's Mounting Rails

Keep the following guidelines in mind as you perform the installation steps in the next section of this chapter.

Sun 56-Inch Data Center —

No more than two disk drive mounting trays (four drives) should be installed in a Sun 56-Inch Data Center.

Use the correct holes in the 56-inch cabinet mounting rails to secure the slide rails for each drive mounting tray you install. Count up from the bottom of the 56-inch cabinet mounting rails to accurately determine these numbers. These holes are:

First (lowest) rails:	Holes 2,4,5 and 7
Second (highest) rails:	Holes 12,14,15 and 17

Refer to the following section for proper installation procedures.

Sun 56-Inch Expansion Cabinet —

Up to eight disk drive mounting trays (sixteen slide rails) may be installed in an 56-inch expansion cabinet.

Use the correct holes in the 56-inch expansion cabinet mounting rails to secure the slide rails for each drive mounting tray you install. Count up from the bottom of the 56-inch expansion cabinet mounting rails to accurately determine these numbers. These hole numbers, listed below, are the same for the front and rear rails.

First (lowest) rails:	Holes 2,4,5 and 7
Second set of rails:	Holes 12,14,15 and 17
Third set of rails:	Holes 23,25,26 and 28
Fourth set of rails:	Holes 33,35,36 and 38
Fifth set of rails:	Holes 43,45,46 and 48
Sixth set of rails:	Holes 53,55,56 and 58
Seventh set of rails:	Holes 64,66,67 and 69
Eighth set of rails:	Holes 74,76,77 and 79

Refer to the following section for proper installation procedures.

CAUTION **For safety reasons, all disk drive mounting trays should be installed starting in the lowest position possible in the 56-inch cabinet. This way, the 56-inch cabinet will be less likely to tip over.**

3.4. Installing Two-Drive Trays in the Sun 56-inch Cabinet

Your system should have been shipped to you with both mounting trays already installed. If this is not the case, or if you want to install additional trays in your 56-inch expansion cabinet, read this section and follow the instructions. If you already have your trays installed, proceed to Chapter 4.

Installing the Slide Rails

These installation instructions apply equally to slide rails installed on both the right and left sides of either the Sun 56-Inch Data Center or the Sun 56-Inch Expansion Cabinet cabinet.

CAUTION **When you are performing any installation procedures in this manual, it is particularly important that you use SAE 10-32 screws to attach *anything* to the 56-inch cabinet mounting rails. Use of metric screws will *permanently* damage these rails.**

In the box that contained the disk drive mounting tray and the slide rails, there is a bag of hardware that contains screws for mounting the slide rails to the 56-inch cabinet mounting rails. You will need these screws for the following installation

procedure.

1. Remove two of the slide rails from the carton. The slide rails are actually pieces of sheet metal, about 6 inches high and 19 inches long. Refer to Figure 3-1 or Figure 3-2 for a visual representation of these slide rails.
2. Facing the 56-inch cabinet from the front, place one of the slide rails into the 56-inch cabinet as shown in Figures 3-1 and 3-2.
3. Loosely install four SAE 10-32 mounting screws through the holes in the front of the slide rail, and into the appropriate holes in the 56-inch cabinet mounting rails. Refer to Section 3.3, entitled Guidelines for Mounting the Slide Rails to the Sun 56-Inch Cabinet Mounting Rails" for the proper hole numbers for the tray you're installing.

Figure 3-1 *Attaching Slide Rails Inside the Sun 56-Inch Data Center Cabinet*

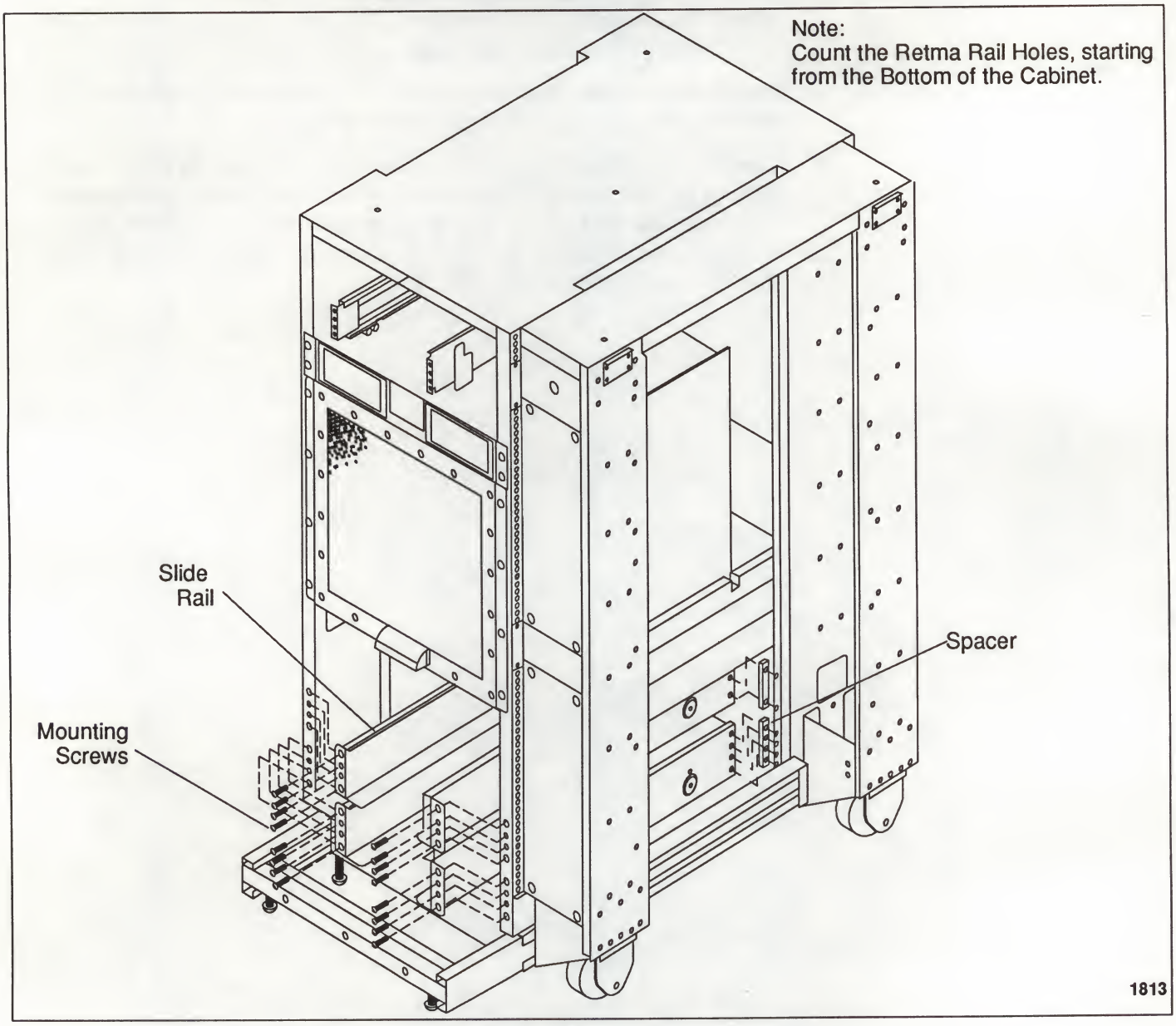

Figure 3-2 *Attaching Slide Rails Inside the Sun 56-Inch Expansion Cabinet*

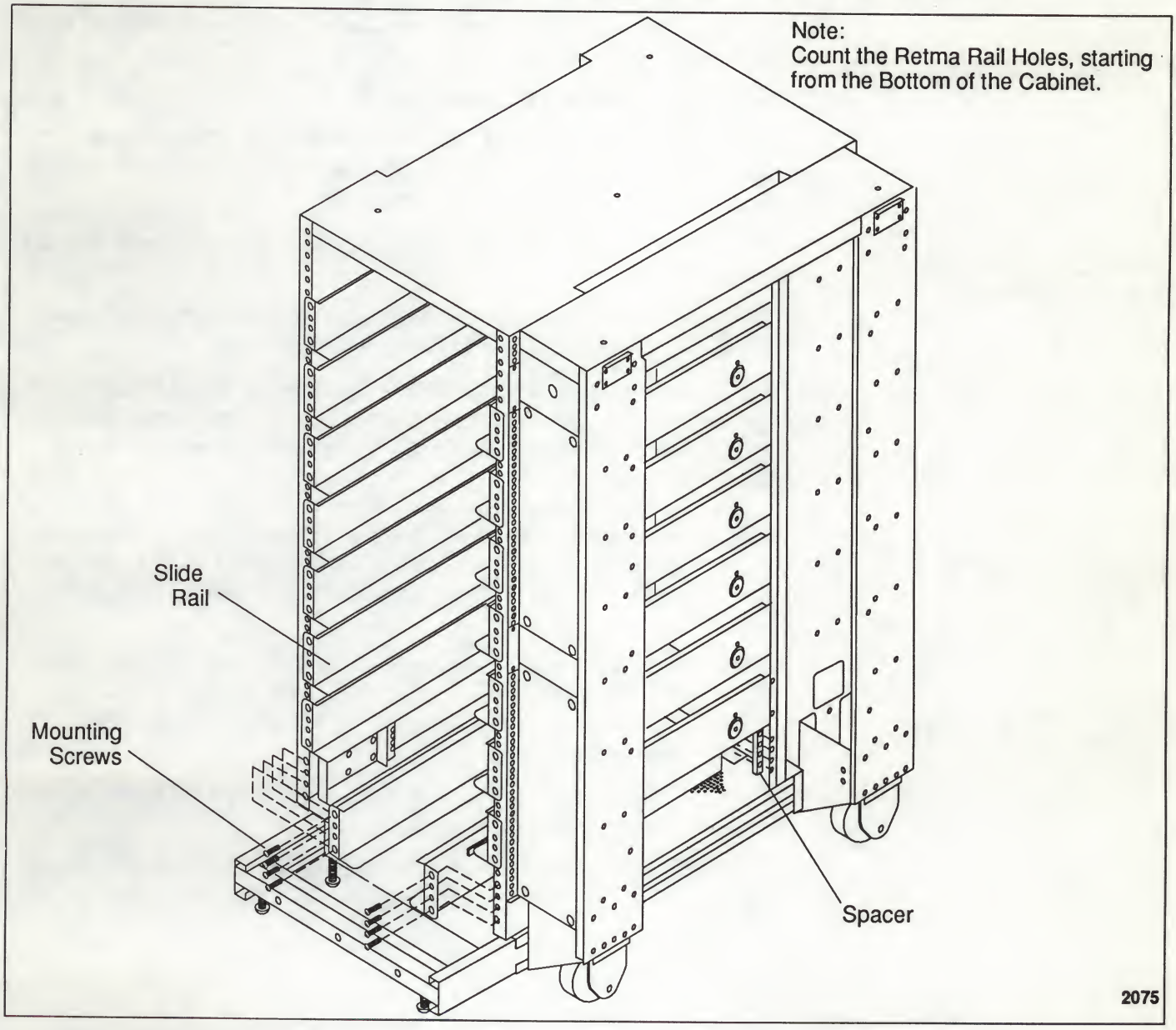

4. Move to the rear of the 56-inch cabinet, and position yourself to view the rear 56-inch cabinet mounting rails. Note that these rails are oriented toward the sides of the 56-inch cabinet, rather than the front of the 56-inch cabinet. Loosely install four SAE 10-32 mounting screws through the holes in the rear of the slide rail, the spacer at the rear of the slide rail, and into the appropriate holes in the 56-inch cabinet mounting rails. Refer to Section 3.3, entitled Guidelines for Mounting the Slide Rails to the Sun 56-Inch Cabint Mounting Rails" for the proper hole numbers for the tray you're installing.

5. Return to the front of the 56-inch cabinet, and fully tighten the slide rail's front mounting screws.
6. Return to the rear of the 56-inch cabinet, and fully tighten the slide rail's rear mounting screws.
7. Repeat this procedure for the other slide rail.

Both slide rails are now fully installed in the 56-inch cabinet. Repeat steps 1 through 7 for each additional set of slide rails you install. When you've finished installing the slide rails, proceed to the next section.

Attaching the Drive Mounting Trays to the Slide Rails

The steps provided in this section describe how to mount the drive mounting tray to the slide rails.

1. Remove the drive mounting tray from the carton. Refer to Figures 3-3 and 3-4 for a visual representation of the drive mounting tray.
2. Facing the 56-inch cabinet from the front, position the tray so that the two drive-securing mechanisms (spring-loaded pins), and the two tray -securing mechanisms (a spring-loaded pin and a spring-loaded thumbscrew) are on the end of the tray that's away from you (the rear of the tray). Note the each of the slide rails has a lip along the top edge. Position the tray so its sides line up to fit under the lip on each slide rail. Then push the tray into the 56-inch cabinet along the slide rails as shown in Figures 3-3 and 3-4. You may have to wiggle the tray a bit to get it to slide in, if it becomes stuck along the way.
3. When you get the tray all the way in, you'll hear a "click". This signifies that the spring-loaded pin has engaged. This pin helps keep the tray from sliding back out. Again, refer to Figures 3-3 and 3-4 (next pages) for a visual representation.
4. Go to the rear of the 56-inch cabinet. Push in and tighten the spring-loaded thumbscrew on the left side of the tray.
5. Repeat steps 1 through 4 for each additional tray you want to install. When you have finished installing the trays, proceed to Chapter 4.

Figure 3-3 *Attaching a Two-Drive Mounting Tray Inside the Sun 56-Inch Cabinet*

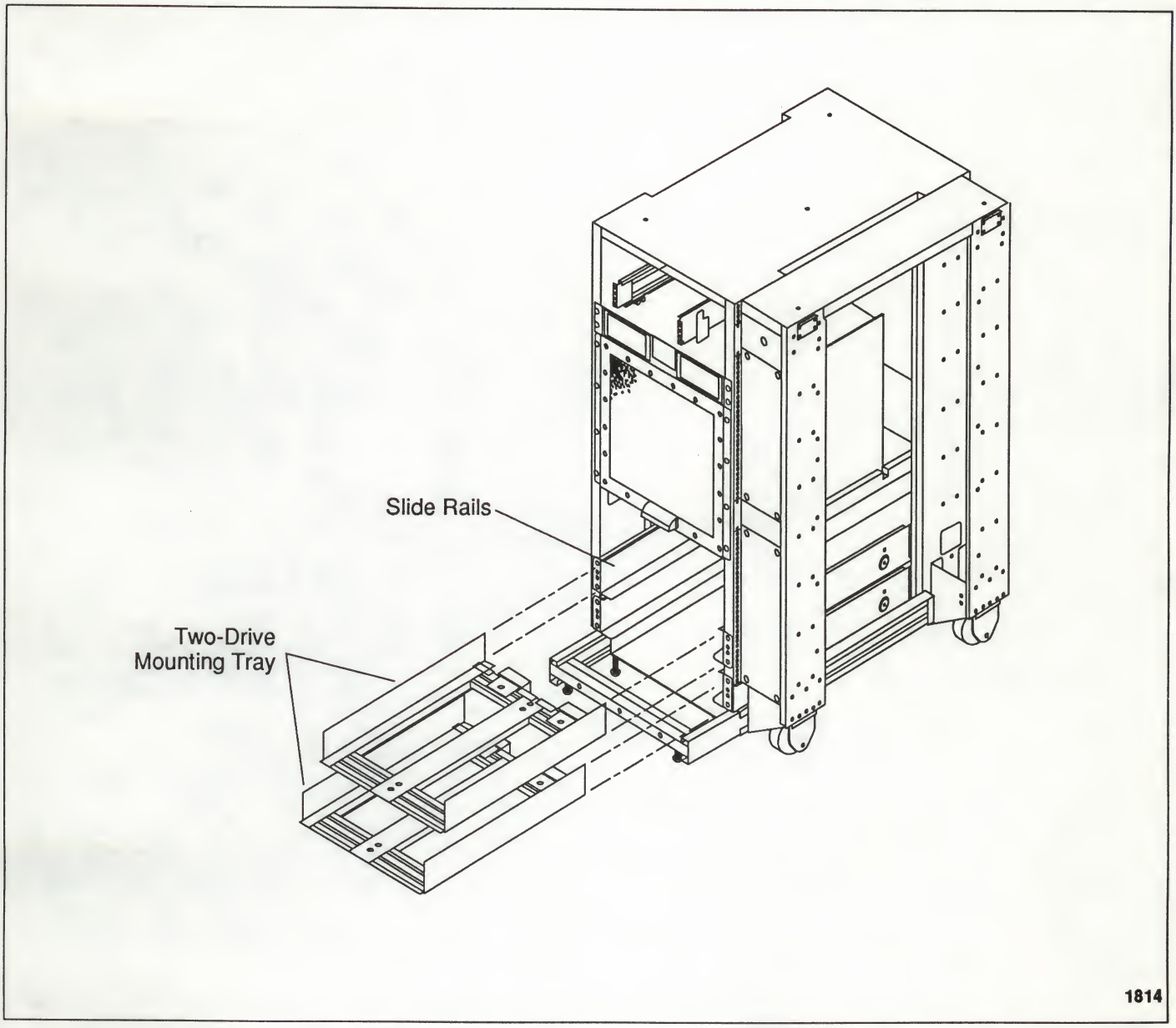

Figure 3-4 *Attaching a Two-Drive Mounting Tray Inside the Sun 56-Inch Expansion Cabinet*

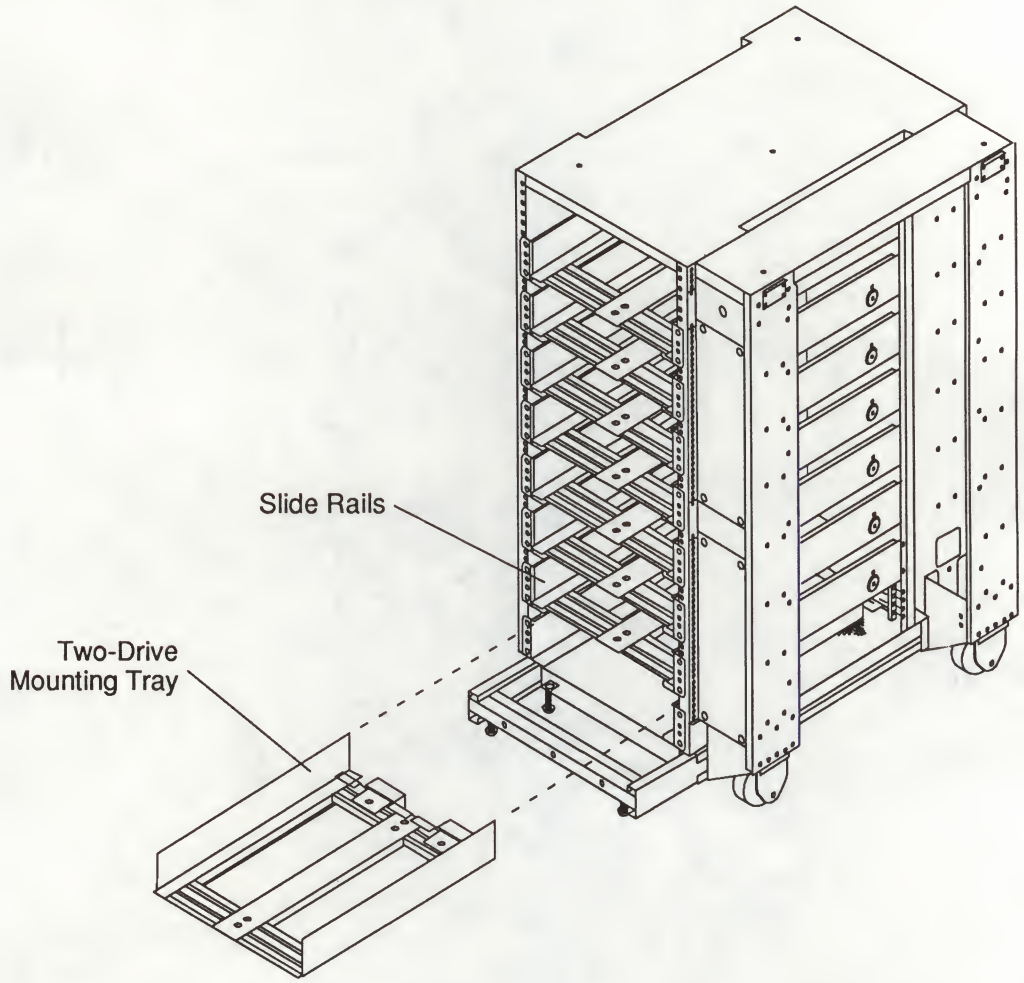

4

Disk Drive Installation

4

Disk Drive Installation

CAUTION **The disk drive weighs approximately 50 lbs. (23 kg.). Use safe lifting practices when removing the drive from the shipping container and when installing and removing the drive from the 56-inch cabinet.**

WARNING ***The stabilizing bar should always be fully extended* before *you begin to install or remove disk drives. (Refer to Section 4.3).***

4.1. Orientation

All directions concerning the disk drive, such as left, right, front and rear, are given as though viewing the disk drive while looking at its front panel.

4.2. Tools Required

A #2 Phillips screwdriver is required to install the disk drive in a Sun 56-inch cabinet's mounting tray.

4.3. Stabilizing the Sun 56-Inch Cabinet

The Sun 56-inch cabinet is equipped with an extendible stabilizing bar to stabilize the 56-inch cabinet against tipping during drive installation and removal. This bar is located at the bottom front of the Sun 56-inch cabinet. (See Figure 4-1.)

WARNING ***It is* VERY IMPORTANT *that this bar be fully extended during drive installation. If this bar is not fully extended, the 56-inch cabinet may tip over and* VERY *serious injury could result.***

To use the Sun 56-inch cabinet's stabilizing bar, perform the following steps:

1. Rotate the feet on the stabilizing bar until they almost touch the floor. When viewed from above, turning the feet clockwise lowers the feet. Turning the feet counterclockwise raises the feet.
2. Pull the stabilizing bar out from under the 56-inch cabinet until it is fully extended.
3. Turn the feet clockwise by hand until they are in full contact with the floor and can no longer be easily turned. Extension and setting of the stabilizing bar is now complete.

Figure 4-1 *Sun 56-Inch Cabinet Stabilizing Bar*

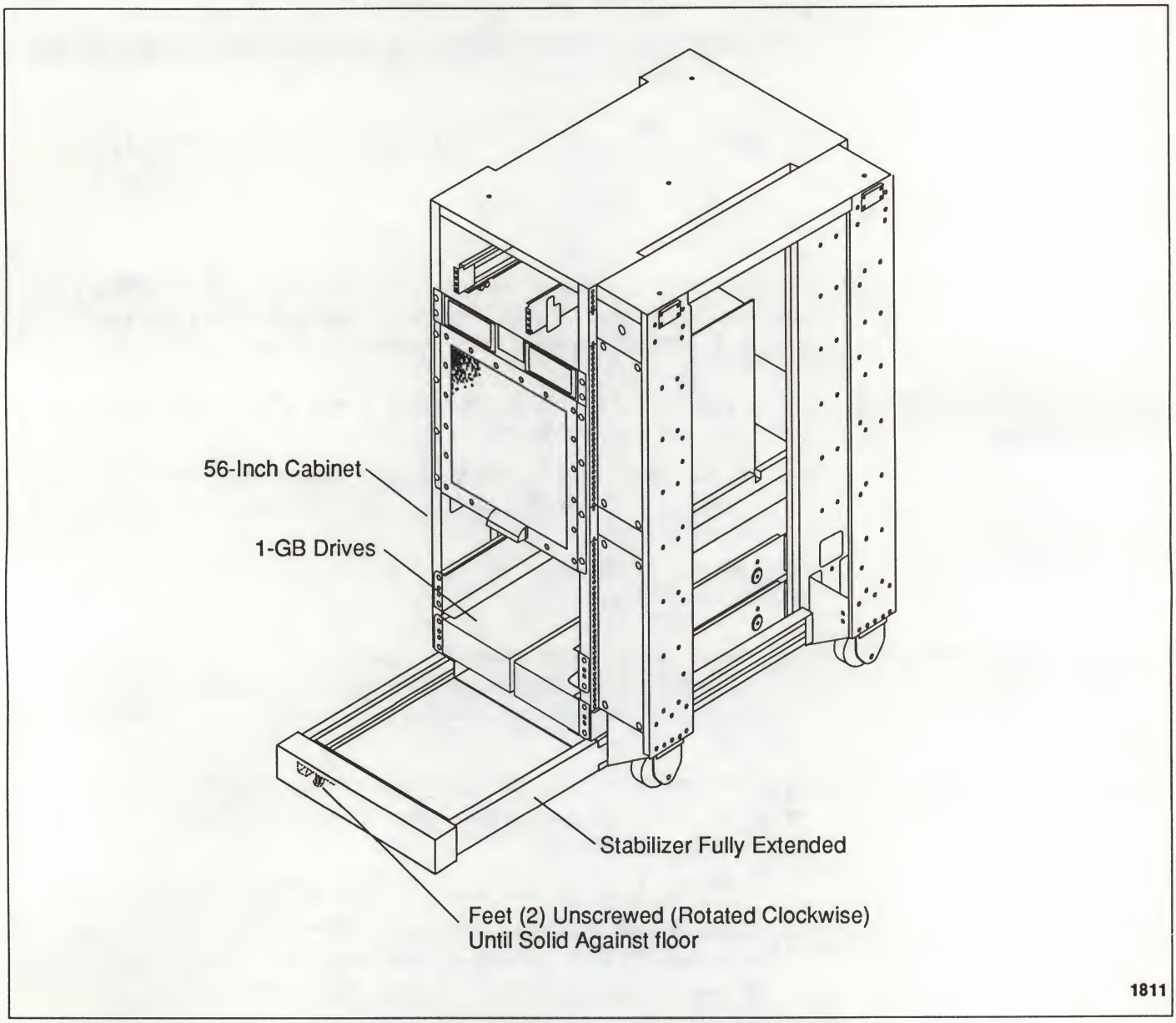

4.4. Determining the Drive Location

Sun Microsystems strongly recommends that drives be installed starting at the bottom of the 56-inch cabinet. This puts the weight as low as possible in the 56-inch cabinet, making it harder to tip over.

4.5. Installing the Drive in the Sun 56-Inch Cabinet

A drive assembly includes a drive, a power supply, and a tray (sometimes referred to as the inner tray) in which the drive and power supply are mounted. This assembly is installed inside a selected mounting tray (sometimes referred to as the outer tray) inside the 56-inch cabinet. The drive assembly is installed in the mounting tray in the 56-inch cabinet by sliding the drive assembly into the left or right half of the mounting tray. (Refer to Figures 4-2 and 4-3). When the

inner tray is fully inside the outer tray, it is automatically secured to the outer tray at both the front and the rear. (Refer to Figure 4-4). The installation sequence is as follows:

1. If you have not already done so, extend the stabilizing bar to stabilize the 56-inch cabinet.
2. Verify that the drive assembly power supply voltage select switch is set to 230 V. (If you purchased the drive assembly from Sun Microsystems, it will be.) If the switch is set to 115 V, refer to Chapter 6 for instructions on changing the switch setting.
3. Carefully lift one disk drive assembly until it is level with a selected tray in the 56-inch cabinet. You may want to use two people for this operation.

Figure 4-2 *Inserting a Drive into an Outer Mounting Tray - Data Center Cabinet*

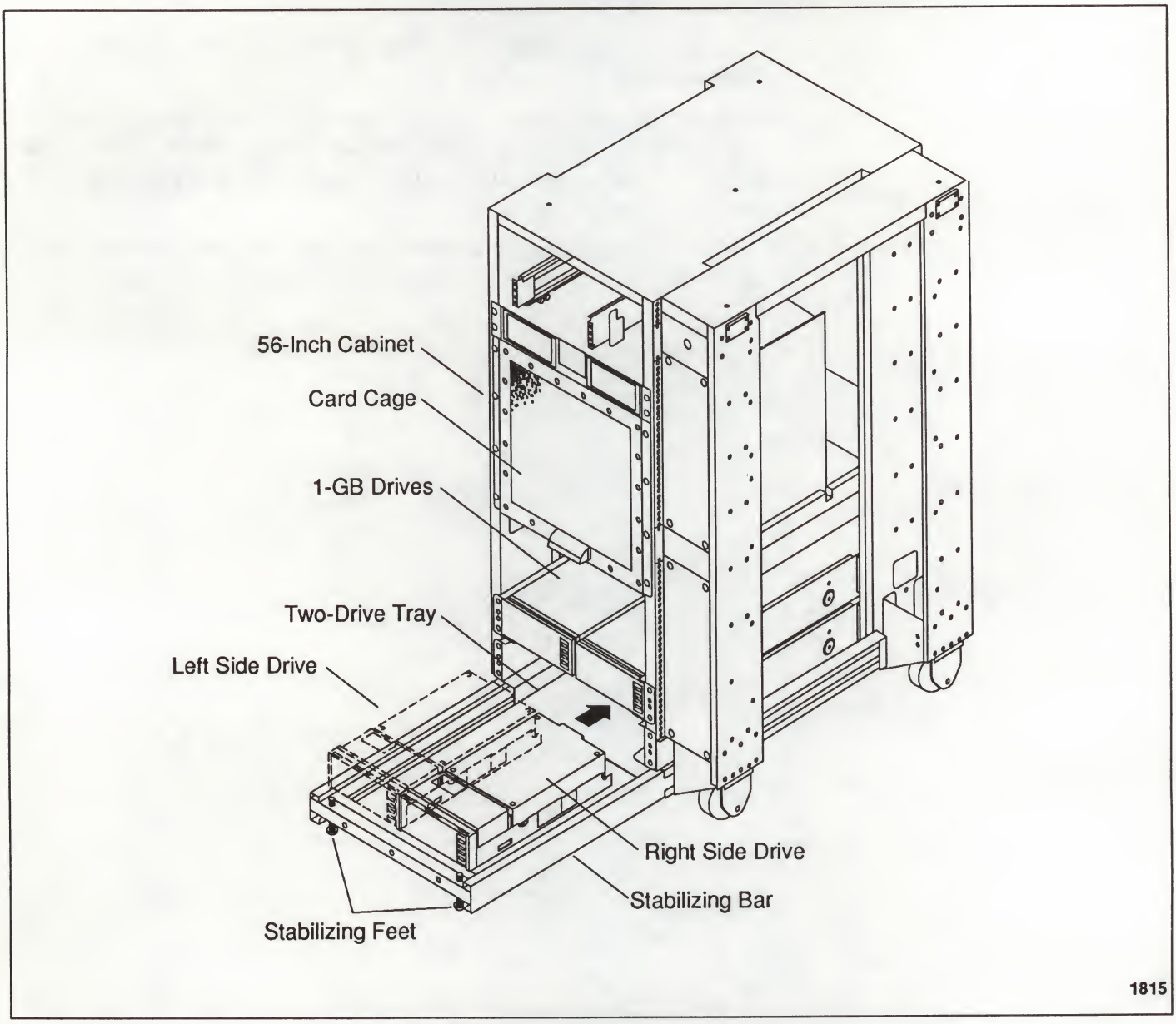

Figure 4-3 *Inserting a Drive into an Outer Mounting Tray - Expansion Cabinet*

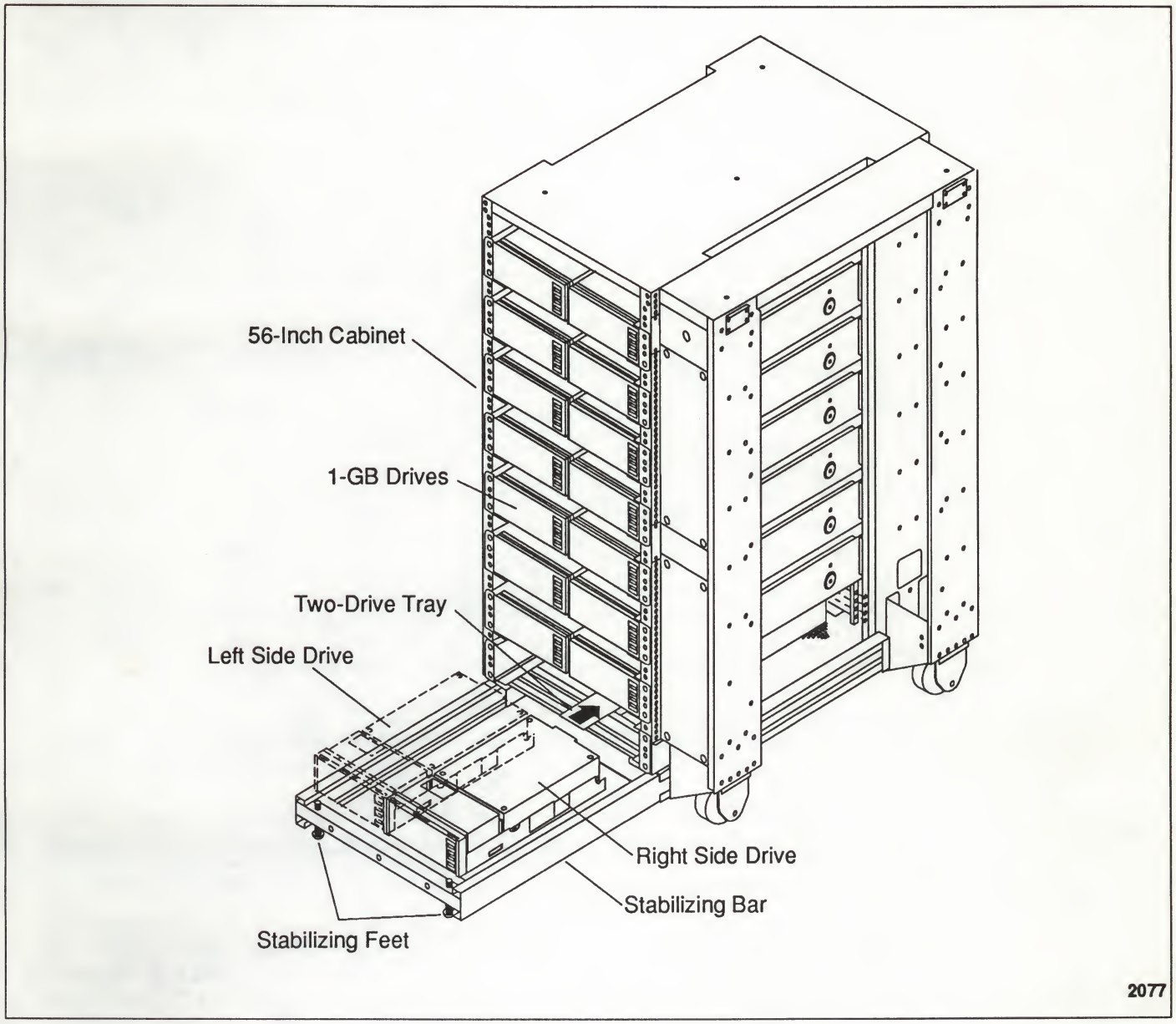

4. Slowly slide the drive assembly fully into the selected outer tray. When the drive assembly is nearly in, you will feel a resistance to further sliding.

5. Ensure the drive assembly is set fully against either the right or left side of the outer mounting tray. Slide the drive assembly the rest of the way in. When the drive assembly is fully in, you will normally hear a click. This is the outer tray's rear lock engaging the notch in the rear of the inner tray.

6. Refer to Figure 4-4. Verify that the folded metal on the front bottom of the inner tray has fully engaged the metal lip on the front of the mounting tray. Tug on the drive to verify that the rear lock is properly engaged.

Figure 4-4 *Securing the Inner Tray in the Outer Tray*

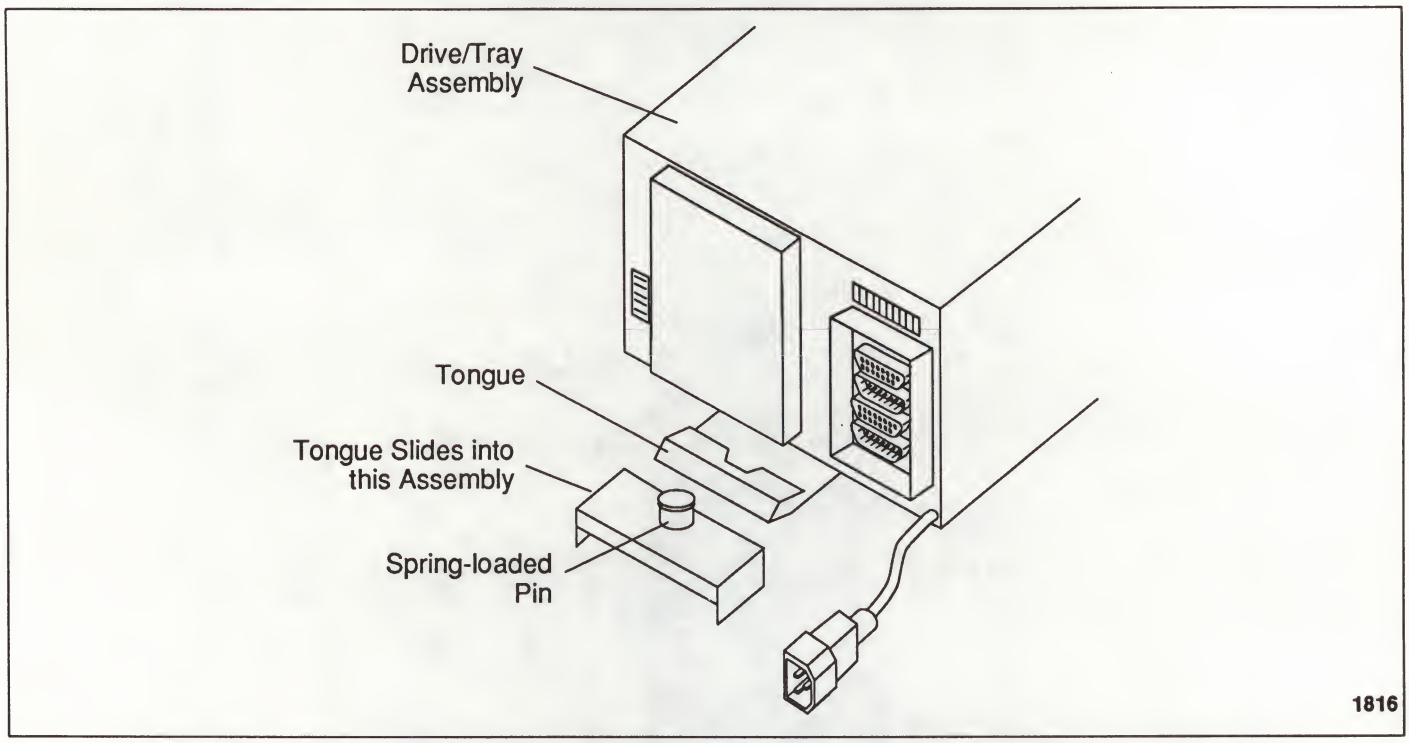

7. Repeat Steps 2 through 6 for each drive to be installed.
8. Rotate the feet supporting the stabilizing bar counterclockwise until the feet are fully retracted up against the bottom of the stabilizing bar. Slide the stabilizing bar back into the bottom of the Sun 56-inch 56-inch cabinet.

4.6. Removing a Drive

Ordinarily, you shouldn't have to remove a drive. However, if you ever do, as when installing new drives or during a service call, use the following procedure.

1. Fully extend the Sun 56-inch Cabinet's stablizing bar. Refer to Section 4.3).

WARNING ***It is* VERY IMPORTANT *that the Sun 56-inch cabinet stabilizing bar is fully extended when a drive is removed. If the stabilizing bar is not extended, the cabinet may tip over and* VERY *serious injury could result. See Section 4.3 for information on how to extend the stabilizing bar.***

2. Power down the system as described in section 5.2.
3. Locate the two cables connected to the drive assembly. One cable is the power cable and the other is the signal cable. Refer to Figure 4-5, below.

Figure 4-5 *Rear View of Drive Assembly*

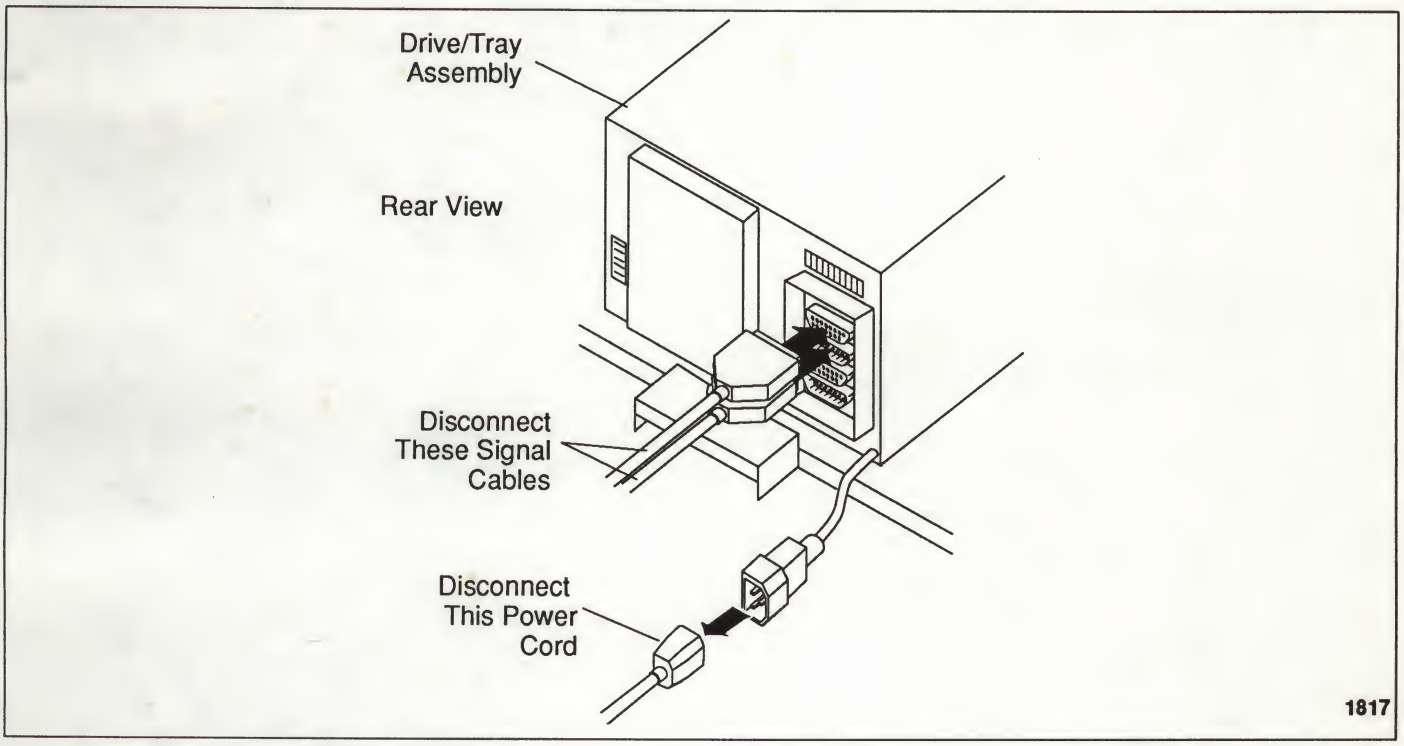

Carefully unplug both cables from the drive assembly. If the drive you are removing is not being replaced, secure the freed power cable to a vertical bar on the power bus side of the Sun 56-inch Cabinet.

CAUTION **Take great care if you must move a drive while it's still connected to its power and signal cables. These cables are short and must not be stretched or pinched.**

4. The inner tray's rear securing mechanism includes a spring-loaded pin. Refer to Figure 4-4. Lift up this pin to free the inner tray. While holding up this pin, slowly push the drive assembly out of the securing mechanism. To avoid an instability problem, do not push the drive assembly more than four inches away from the mechanism - it is now not secured in any way to the outer tray, and can fall out of the 56-inch cabinet if it becomes unbalanced.

5. Move back around to the front of the Sun 56-inch cabinet. Carefully slide the drive assembly out the front of the outer tray. Carefully set the drive assembly on a workbench or strong table.

6. If you are not installing a new drive at this time, rotate the feet supporting the stabilizing bar counterclockwise until the feet are fully retracted up against the bottom of the stabilizing bar. Slide the stabilizing bar back into the bottom of the Sun 56-inch cabinet.

7. If the drive is to be returned to Sun Microsystems, contact your local Sun Microsystems representative for return instructions.

8. If you want to power up the system, be sure you have correctly re-connected the signal cables according to your new drive configuration. Refer to Chapter 5, "Cabling and Termination" for cabling and termination information. Refer to Chapter 8 for specific information on powering up your system.

5

Cabling and Termination

5

Cabling and Termination

This chapter covers drive cabling and termination.

CAUTION **Users in the United States must consult local electrical codes prior to installing 6-meter data and/or command cables. The cables described in this chapter have a "CL2" rating per article 725 of the National Electric Code. This rating may not be appropriate for cables installed in air plenums. Refer to articles 645 and 725 of the National Electric Code, as well as local electrical codes, to obtain the necessary information.**

5.1. Overview

The following cabling overview includes a cabling description and information on the cabling connector location on the disk drive.

Cable Description

In an IPI system, there is only one cable between the ISP-80 controller board and a drive. This cable carries both command and data information. This same type of cable is also used to daisy-chain between disk drives in the same 56-inch cabinet.

Figure 5-1 shows the cables used with the IPI drives in the 56-inch cabinet. These cables come in .45-meter (18 inches), 2-meter and 8-meter lengths. The 8-meter cables are for cabling cabinets together.

Figure 5-1 *Cables for the Drives in the Sun 56-inch Cabinet*

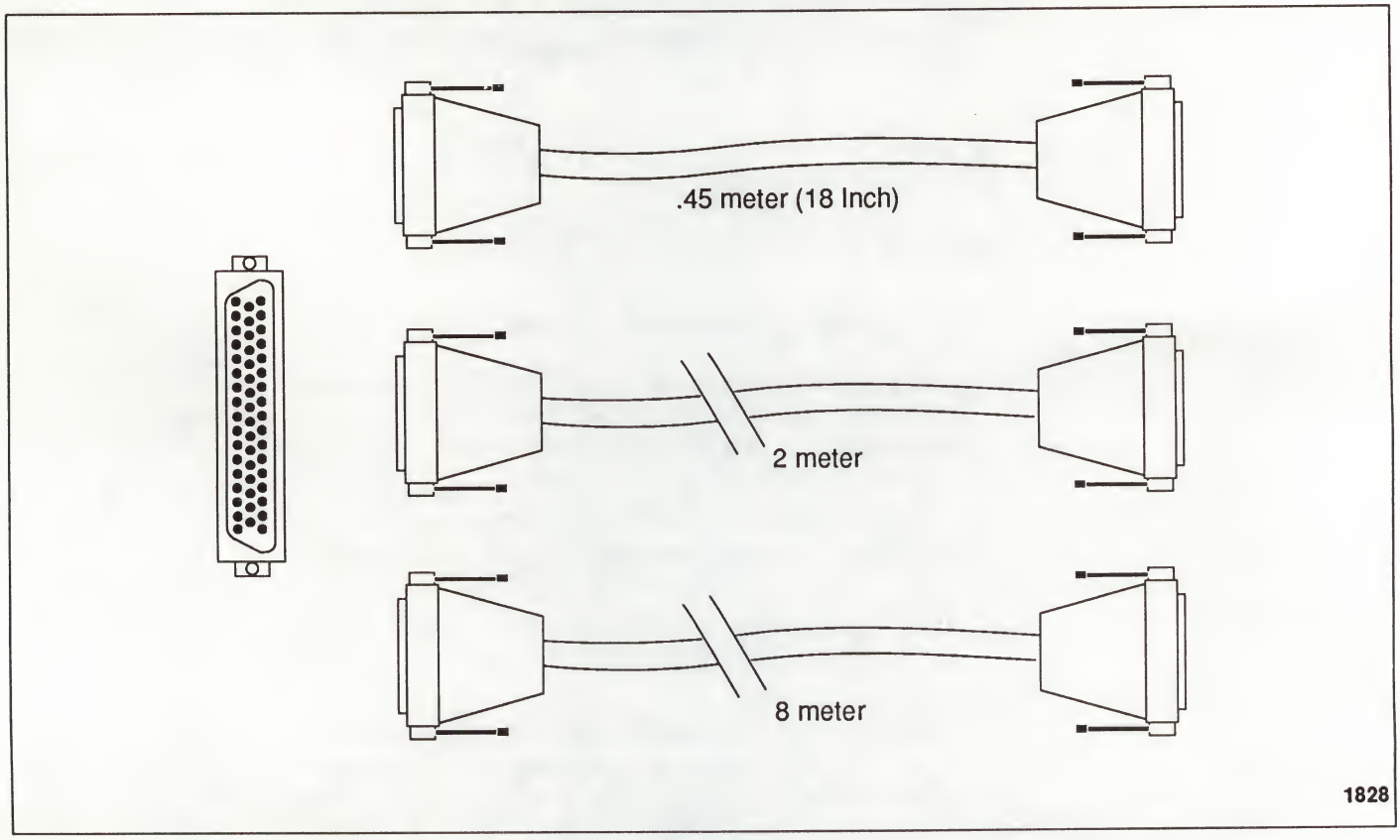

Guidelines for Cabling Sun 56-Inch Cabinets

Here are some guidelines to follow when cabling IPI8-1000 Disk Drives in the Sun 56-Inch cabinets.

1. Do not daisy-chain between the Data Center and Expansion Cabinets. If you have drives in both cabinets, be sure those drives are controlled by different controllers. If you have to cable between cabinets, you have two options:

   Option 1:
   If you are adding drives to your system, and you already have four drives in your Data Center Cabinet, you must first move the four drives into the Expansion Enclosure and build drive configurations in blocks of eight (8) per controller.

   Option 2:
   You can purchase an additional ISP-80 Disk Controller and dedicate it to drives in the Expansion Cabinet. The ISP-80 Disk Controller is shipped with a 2m and an 8m cable.

2. The maximum distance between cabinets when using the 2m and 8m cables is 4 meters.

3. The maximum total IPI cable length is 45 meters, starting at the ISP-80 controller connector and ending at the furthest drive in a block of 8 (with the

terminator). The cables are as follows:

2-meter
: This cable goes from the ISP-80 Disk Controller to the bottom of the Data Center Cabinet. When cabling drives in the Sun 56-Inch Data Center Cabinet, this cable connects to the first drive in the series. When cabling to drives in the Sun 56-Inch Expansion Cabinet, this cable connects to an 8-meter cable going to the first drive in that series.

.45-meter
: This cable is used between drives in the same cabinet, whether this cabinet is the Data Center or Expansion cabinet.

8-meter
: This cable is used between the first drive in a series in an Expansion Cabinet and the 2-meter cable of the ISP-80 DIsk Controller in the Data Center Cabinet. The combination of the 2-meter and 8-meter cable provides enough cable to reach the upper block of eight (8) drives in the Expansion Cabinet, provided that the distance between the cabinets does not exceed 4 meters.

Figure 5-2 is a cabling diagram showing the proper cabling configurations for one, two, three or four drives in the Sun 56-Inch Cabinet.

Figure 5-2 *Cabling Drives in the Sun 56-inch Cabinet (Rear View)*

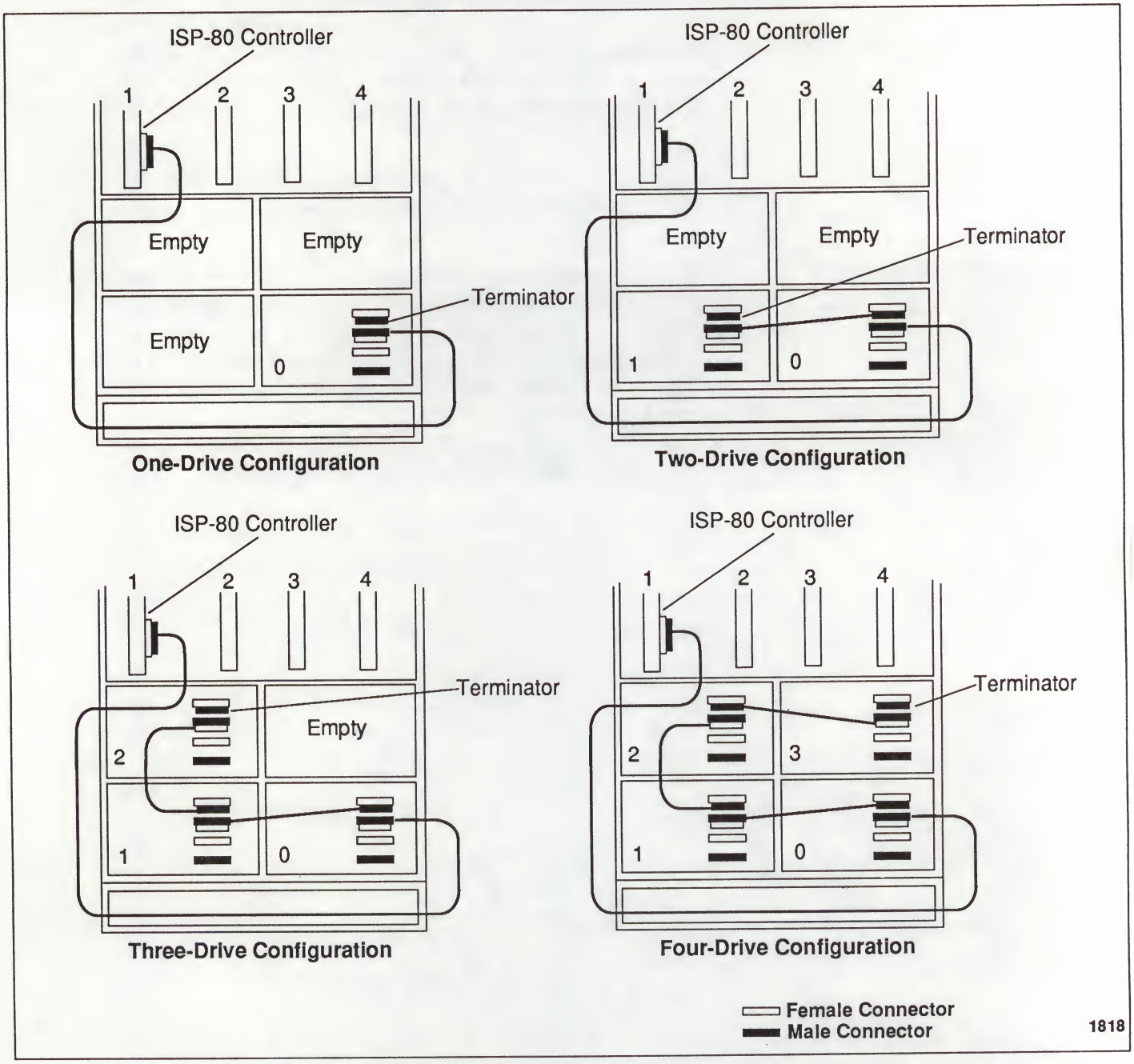

Figure 5-3 is a cabling diagram showing the proper cabling for a full configuration of 32 drives using two Sun 56-Inch Expansion Cabinets and one Sun 56-Inch Data Center Cabinet.

Figure 5-3 *Cabling Drives in the Sun 56-inch Expansion Cabinet (Rear View)*

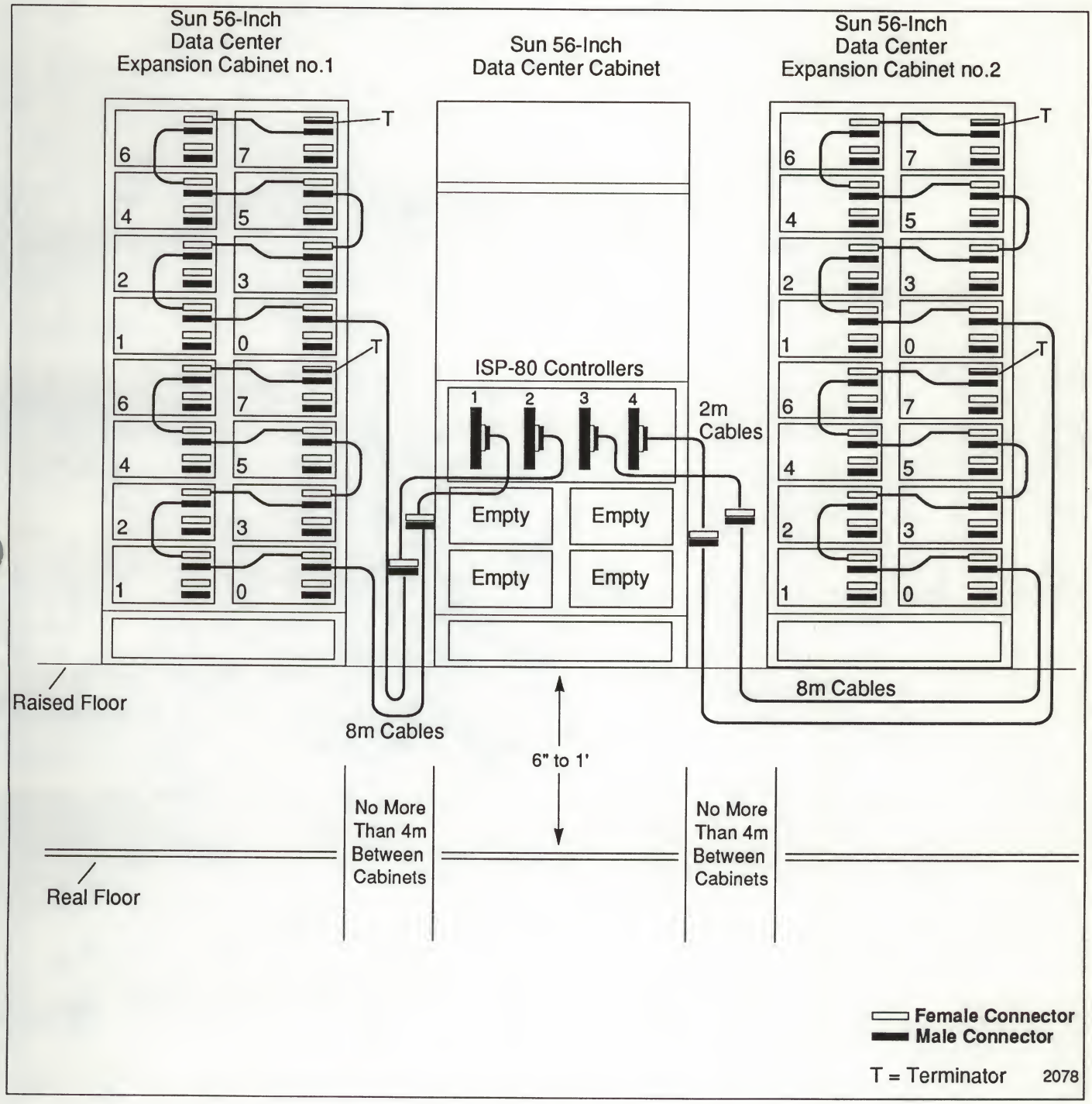

Figure 5-4 shows the proper cable routing for drives in the Sun 56-Inch Data Center Cabinet.

Figure 5-4 *IPI8-1000 Drive Cable Routing in the Sun 56-inch Cabinet*

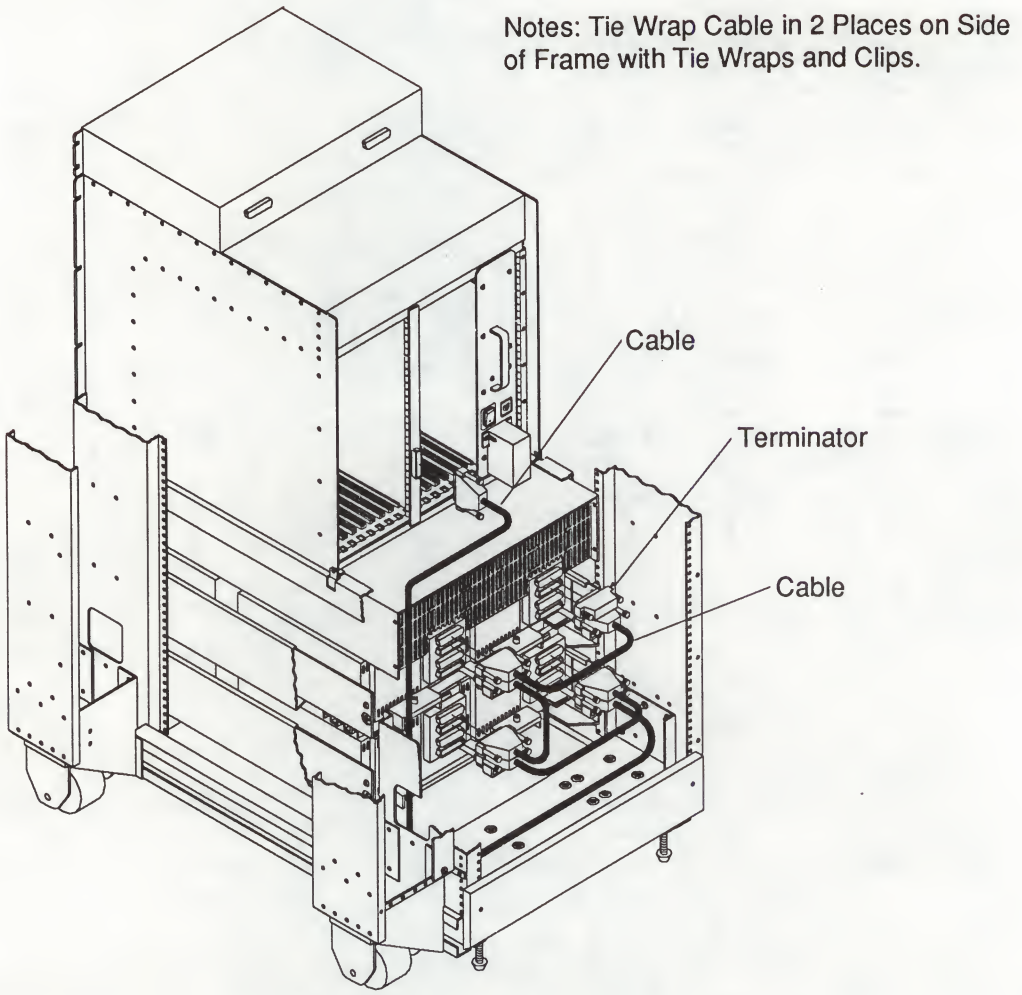

Figure 5-5 shows the proper cable routing for drives in the Sun 56-Inch Expansion Cabinet.

Figure 5-5 *1 Gigabyte IPI8-1000 Drive Cable Routing in the Sun 56-inch Expansion Cabinet*

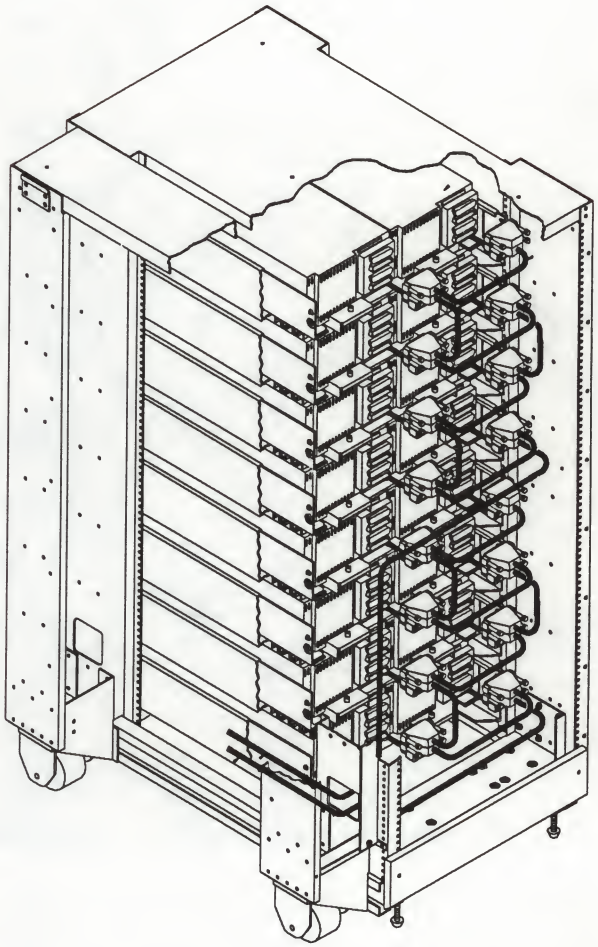

2082

Cable Connector Location

The following sections describes the location of, and how to access, the cable connector for a drive.

The drive cables connect to the male connector on the back of the disk drive, as shown in Figure 5-6.

Figure 5-6 *Drive Cable Connector Location (Rear of Drive)*

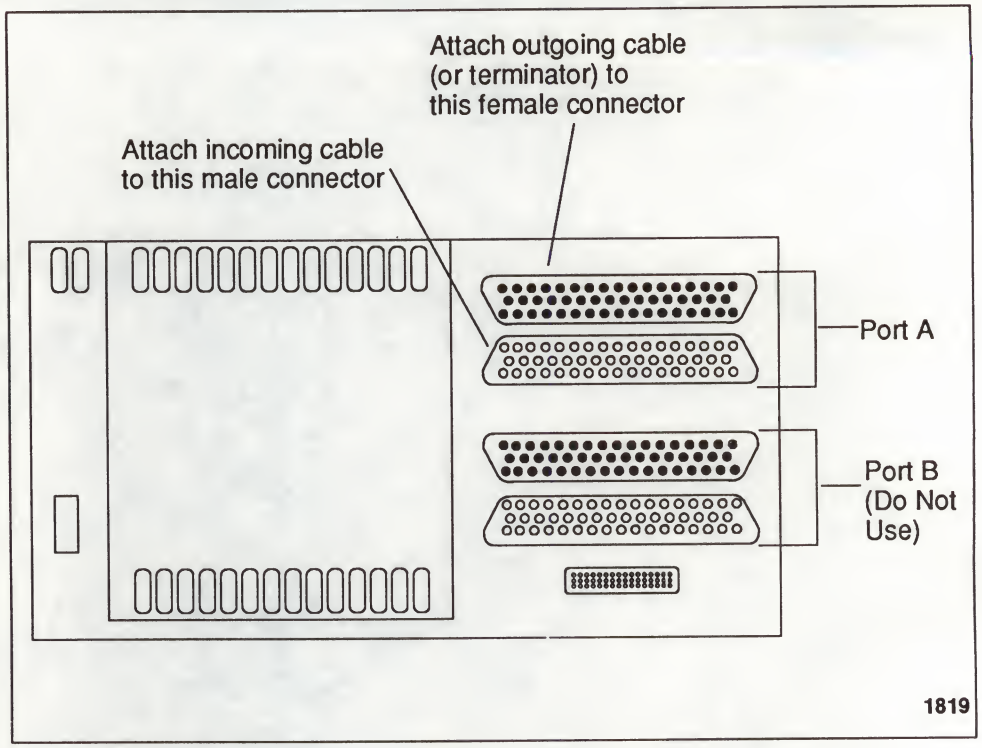

5.2. Installing the Cables

Before cabling the drives, you must power down the system. The following section describes how to power down the system gracefully, with no loss of data.

Graceful Power-Down

Before you power ANYTHING down, you need to halt UNIX. This is known as a "graceful" power-down. To gracefully power down your system, ensure that the system administrator performs the following steps.

1. Back up the system to tape, and save data and files for restoring.
2. Warn clients or other workstation users to log out.
3. As super user, enter either one (not both) of the following two commands:

   `/etc/halt` or `/etc/fasthalt`

   The program called by either of these two commands ensures that all data in the buffers is written to the disk before the operating system (UNIX) is halted.
4. When the operating system is halted, a message notifying you of this is displayed on the monitor, followed by the "boot monitor" prompt (**>**).

5. You may now turn the system power off by toggling off the ganged main power switch on the back of the Sun 56-inch cabinet's power sequencer. (See Figure 5-7, below.

Figure 5-7 *Ganged Main Power Switch - Power Sequencer*

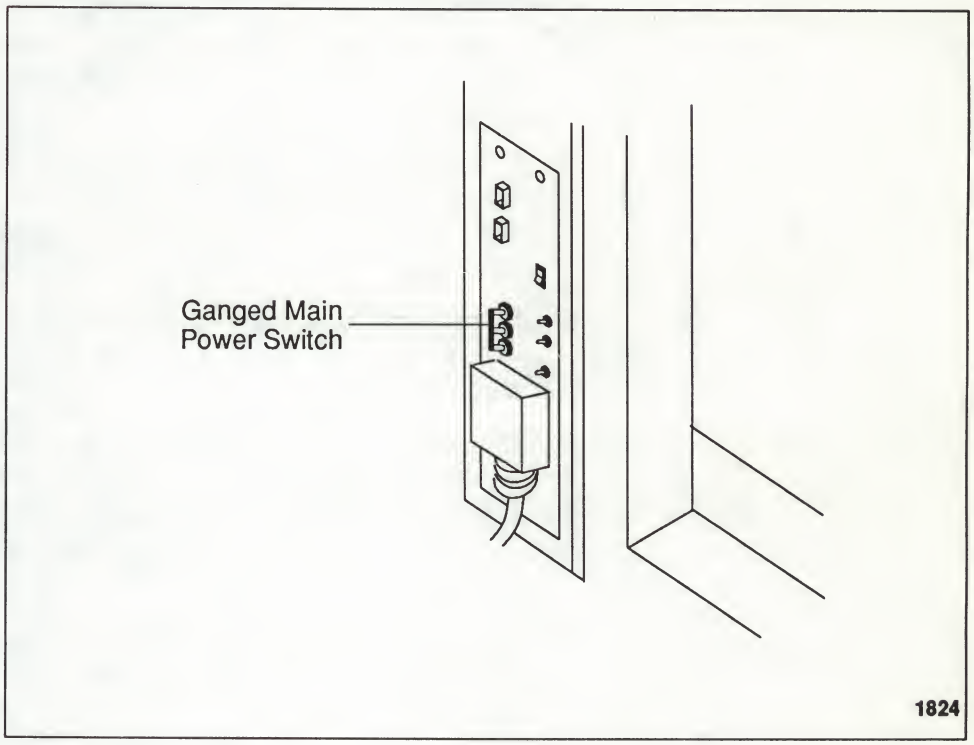

Terminating the Daisy Chain

The female connector on the last drive in the daisy chain must have a terminator (Sun P/N 370-1220-xx) plugged into it.

5.3. Cable Connections - General Notes

NOTE *When installing cables, be sure to use the connector-securing screws. These screws need only to be finger-snug. Over-tightening them may damage the connector.*

NOTE *When installing the cables, DO NOT turn the cables against the natural bend they acquired during shipping. Damage to the connectors can result if this note is not followed.*

5.4. Disk Drive Cable Connection

The disk drive cable for the Sun 56-inch cabinet is shown in Figure 5-1. Refer to Figures 5-2 through 5-5 for examples of cable configuration. Refer to Figure 5-6 for a view of the cable connectors on the back of each disk drive.

1. Referring to Figure 5-2 or 5-3, determine which portion of the illustration matches your configuration.
2. Connect the end of the straight cable coming from the controller (female) to the male end of another of the straight cables. Be sure not to over-tighten the screws.
3. Using Figure 5-2 or 5-3 as a guide for your overall configuration, begin connecting the cables to the drives you've installed. Plug the female end of the first cable (described in Step 2, above) into the male connector of Drive 1 (see Figure 5-2). The correct male connector is shown in Figure 5-6.
4. If you do not have another drive in the configuration, install a terminator (370-1220) on the female connector on the drive. The correct female connector is shown in 5-6. Proceed to Chapter 6.
5. If you do have another disk drive in the configuration, plug the male end of another cable into the female connector on the drive, and plug the female end of that cable into the male connector on the next drive. The correct male and female connectors are shown in 5-6. Remember not to over-tighten the screws.
6. Referring to Figure 5-2 or 5-3, continue to connect the cables for your configuration by following the procedures described in Steps 4 and 5. When you're finished cabling the drives, proceed to Chapter 6.

NOTE *When cabling IPI8-1000 Disk Drives in the Sun 56-Inch Cabinets, use only the 50-pin connectors of the "A" port on the back of each drive. The dip switches on the drives are set to disable the "B" port.*

CAUTION **If you decide to set the dip switches to enable the "B" port, DO NOT cable the drives using both the "A" and "B" ports.**

6

AC Power Connection

6

AC Power Connection

This chapter covers AC input voltage selection (200-240) and AC line cord connection.

CAUTION **It is *very* important when working on any drive in any manner that the system and disk drives be powered down (no power applied). The subsection "Graceful Power Down" under Section 5.2 describes how to power down the system gracefully with no loss of data.**

6.1. AC Voltage Selection

The AC voltage is set at the factory: there is no need to change it. However, the following subsections have been provided in case you want to verify the AC voltage selection in your drive.

WARNING ***Sun Microsystems does not support ANY configurations of 115 volts within the Sun 56-inch Data Center or Expansion Cabinet.***

The AC voltage range used by the disk drive is selected by the voltage selector switch on the side of the drive's power supply. A plate over this switch prevents accidental changes in the switch position. Refer to to Figure 6-1). The drive should already be set to 230 volts.

CAUTION **Be sure that you are using a power cord of the correct type for the voltage selected for your drives, that the rest of the electronics and drives in the 56-inch Cabinets are compatible with that voltage, and that the selected voltage is available at the internal AC module outlet.**

Figure 6-1 *AC Voltage Selection*

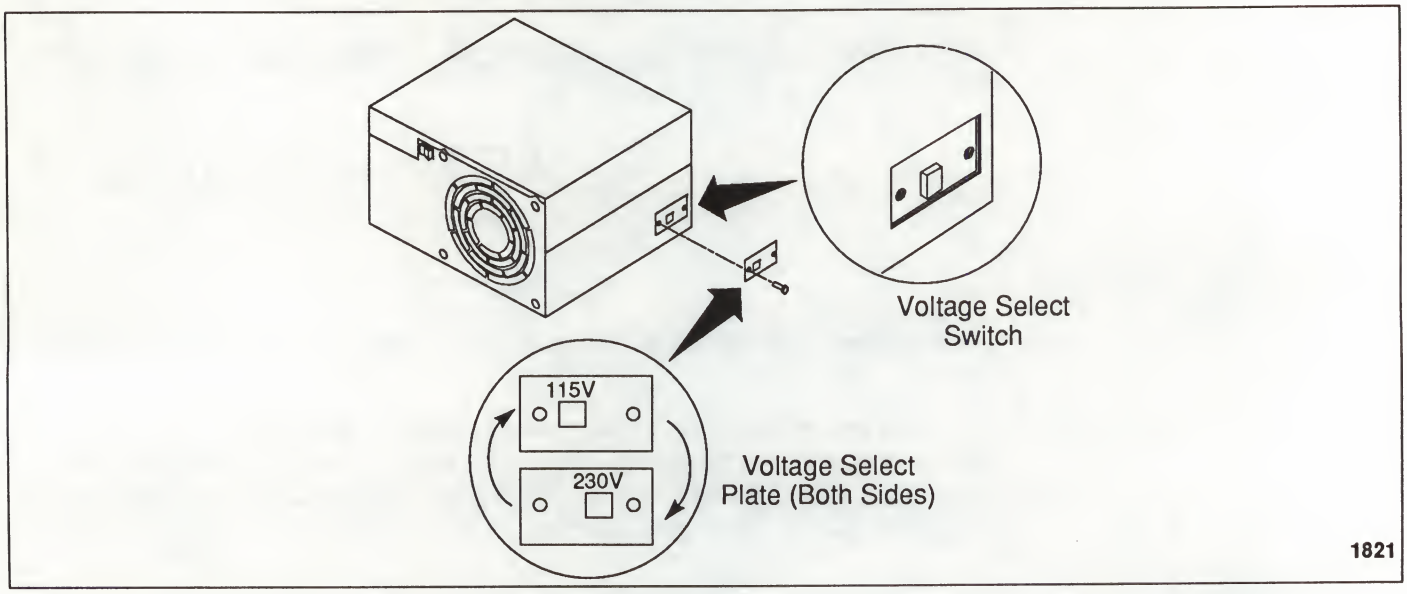

6.2. AC Power Cord Connection

One AC power cord was shipped with each disk drive, in the Sun 56-Inch Data Center. If you have an Sun 56-Inch Expansion Cabinet, you may have received one Y-cable for every two drives, instead of one cable for each drive. Plug the female end of each power cord into each drive's power supply, as shown in Figure 6-2), below. (If you have the Y-cables, you can plug each of the two female ends into a drive's power supply, thus supplying power to two different drives with the same cable.) Plug the other, 3-pronged male end into the power sequencer.

Figure 6-2 *Drive AC Cord Connection*

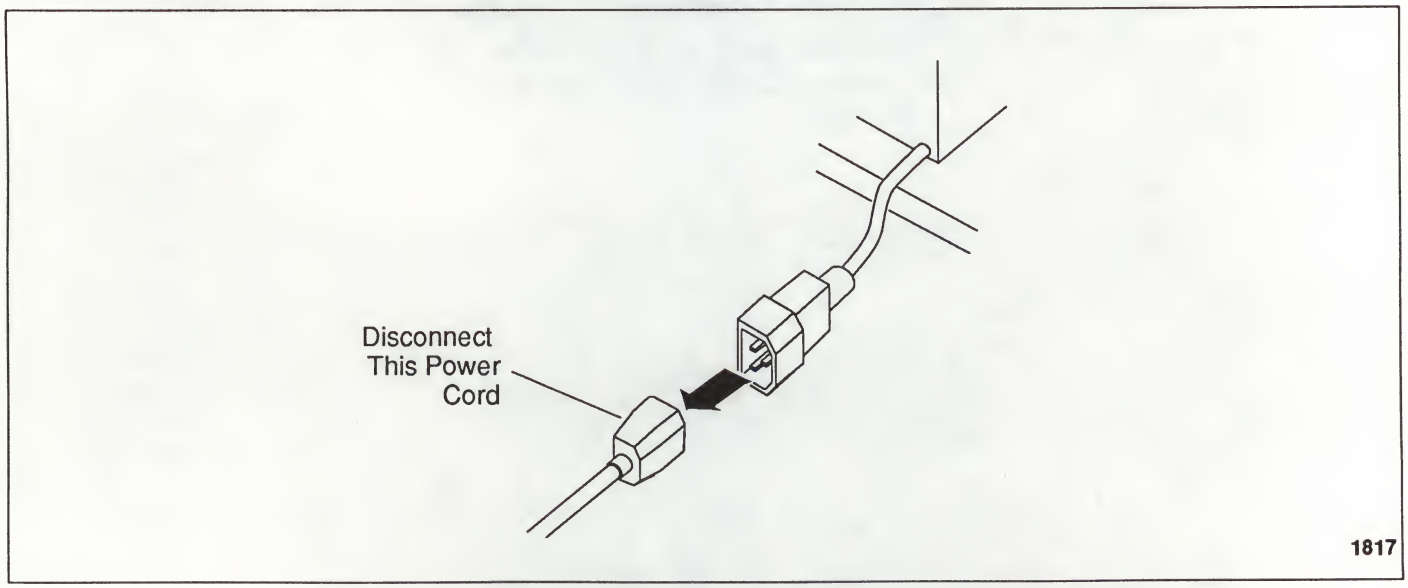

Figures 6-3 and 6-4 on the following pages are graphic representations of proper

AC cord configuration for the Data Center Cabinet and the Expansion Cabinet, respectively. Note that the diagram of the Expansion Cabinet cabling illustrates the "Y" power cables.

Figure 6-3 *AC Cord Configuration - Data Center Cabinet*

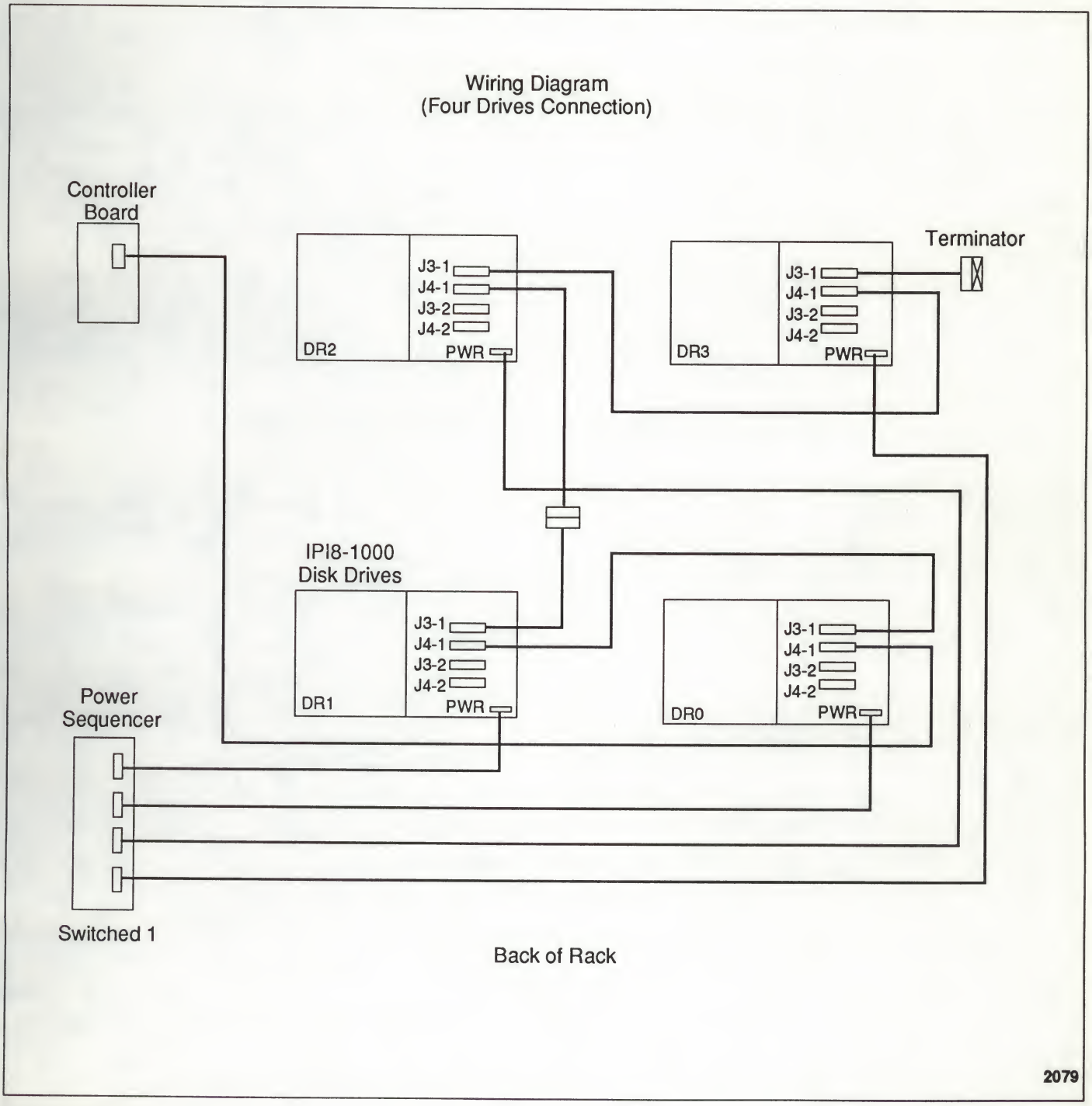

Figure 6-4 *AC Cord Configuration - Expansion Cabinet*

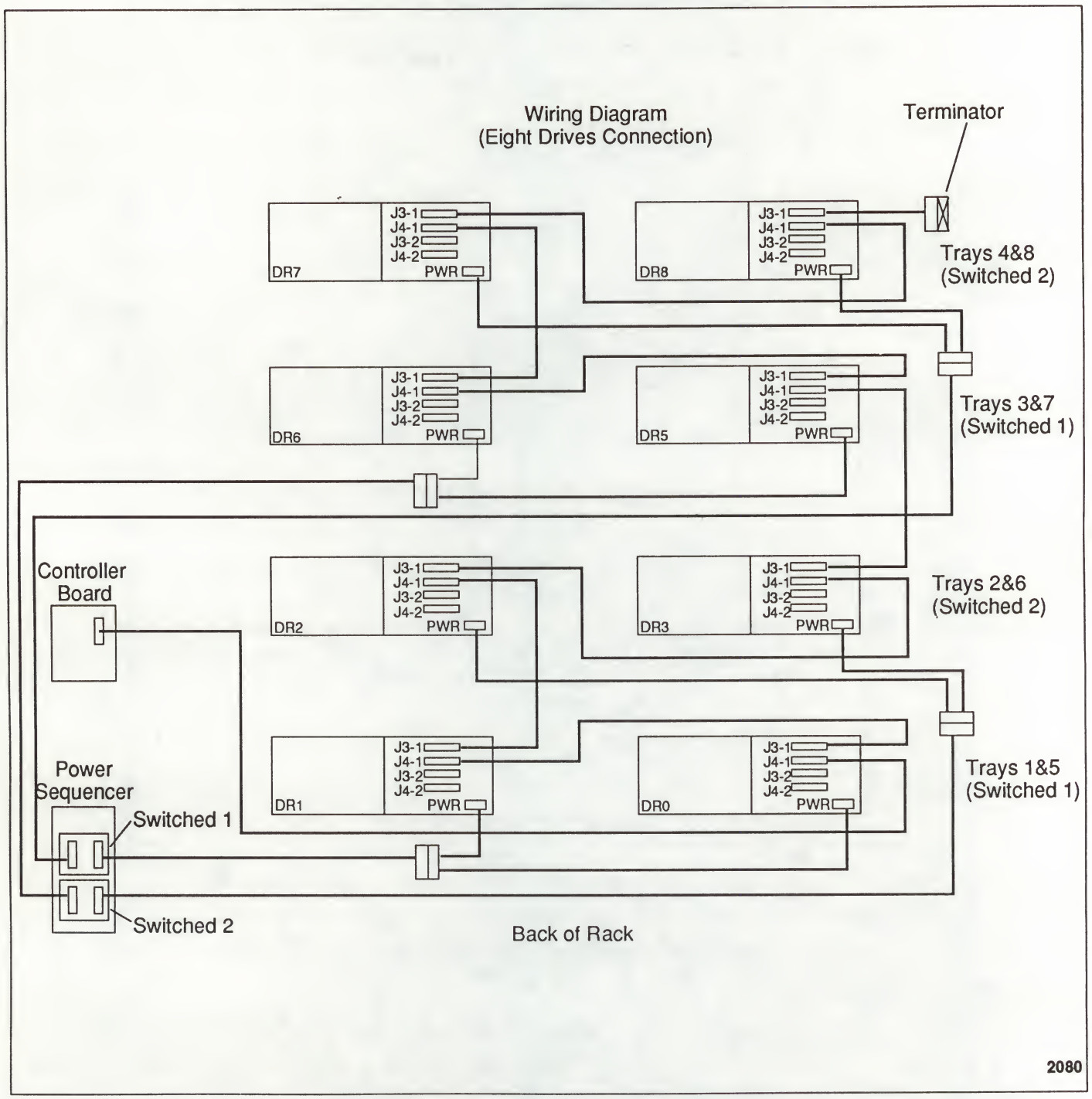

Figure 6-5 illustrates proper routing of the AC cords in the Expansion Cabinet. Note the position of the tie wraps and cable guides.

Figure 6-5 *AC Power Cord Routing - Expansion Cabinet*

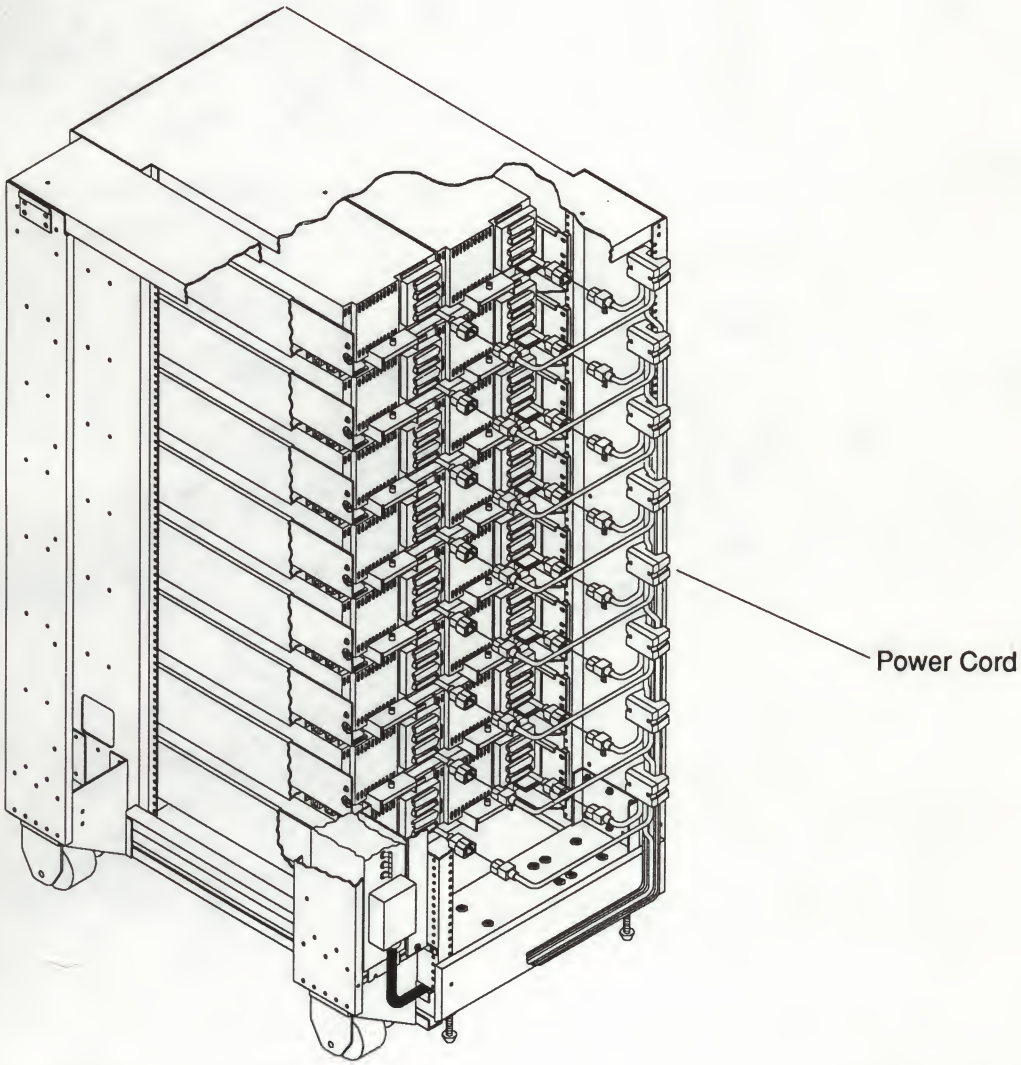

Keep the following guidelines in mind:

1. Power cables should be routed up one side of the Sun 56-inch cabinet, and data cables should be routed down the other.

2. If you have Y-cables, be sure that both branches of the Y-power cable connect to drives in the same tray (if there are two drives in that tray). If there is only one drive in a tray, route the unused branch of the Y-cable along the power-cable side of the Sun 56-inch cabinet.

3. The 230/240-volt power sequencer has eight outlets arranged in two square blocks of four outlets each. If there are four disk drives in the 56-inch cabinet, be sure that the AC line cords for the four drives are evenly divided between the two blocks of outlets. For example, if you have four drives, two disk drive AC line cords should be plugged into the left block of outlets (*Switched 1*) and two disk drive AC line cords should be plugged into the right block of outlets (*Switched 2*). When connecting power cables to the power sequencer, refer to Figure 6-6), 6-7, 6-8, and 6-9 below.

Figure 6-6 *230V Data Center Cabinet Power Sequencer AC Cord Connection*

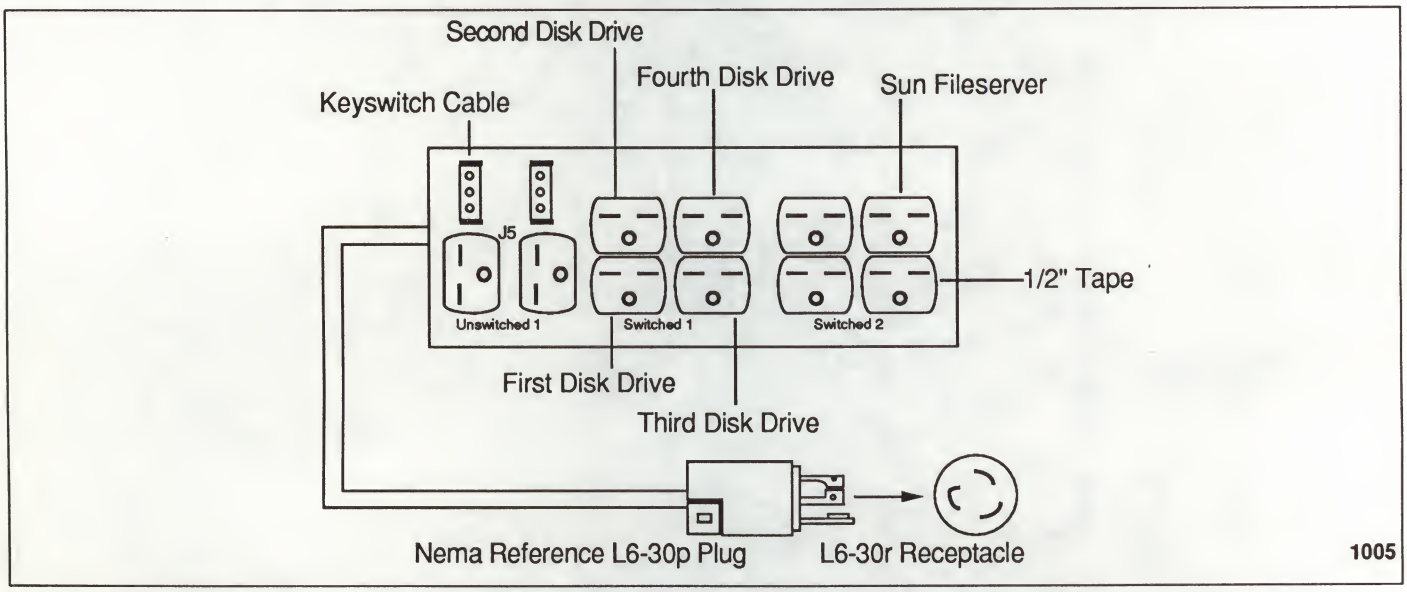

Figure 6-7 *240V Data Center Cabinet Power Sequencer AC Cord Connection*

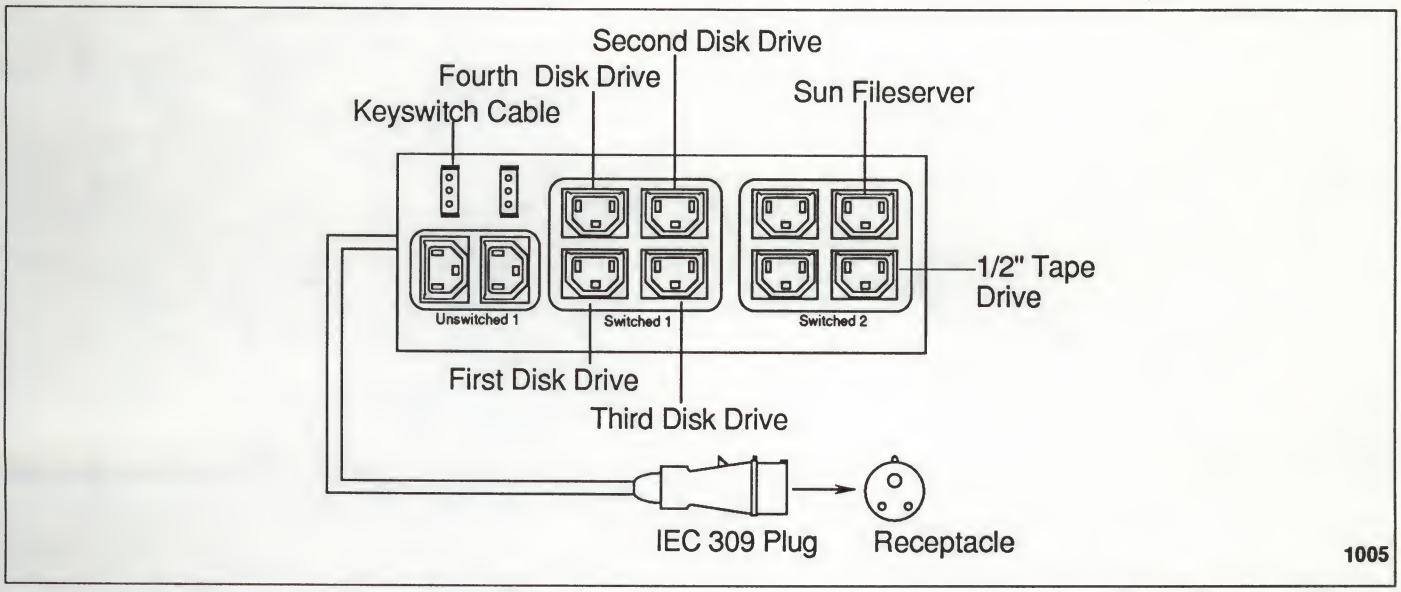

Figure 6-8 *230V Expansion Cabinet Power Sequencer AC Cord Connection*

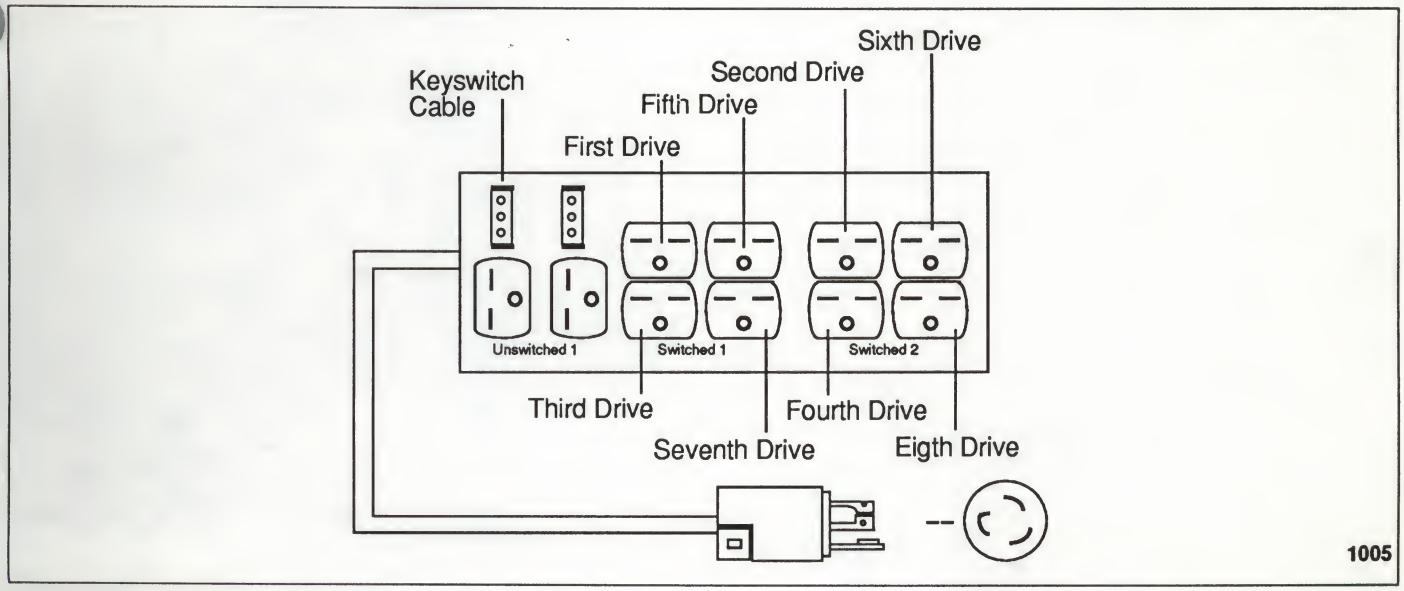

Figure 6-9 *240V Expansion Cabinet Power Sequencer AC Cord Connection*

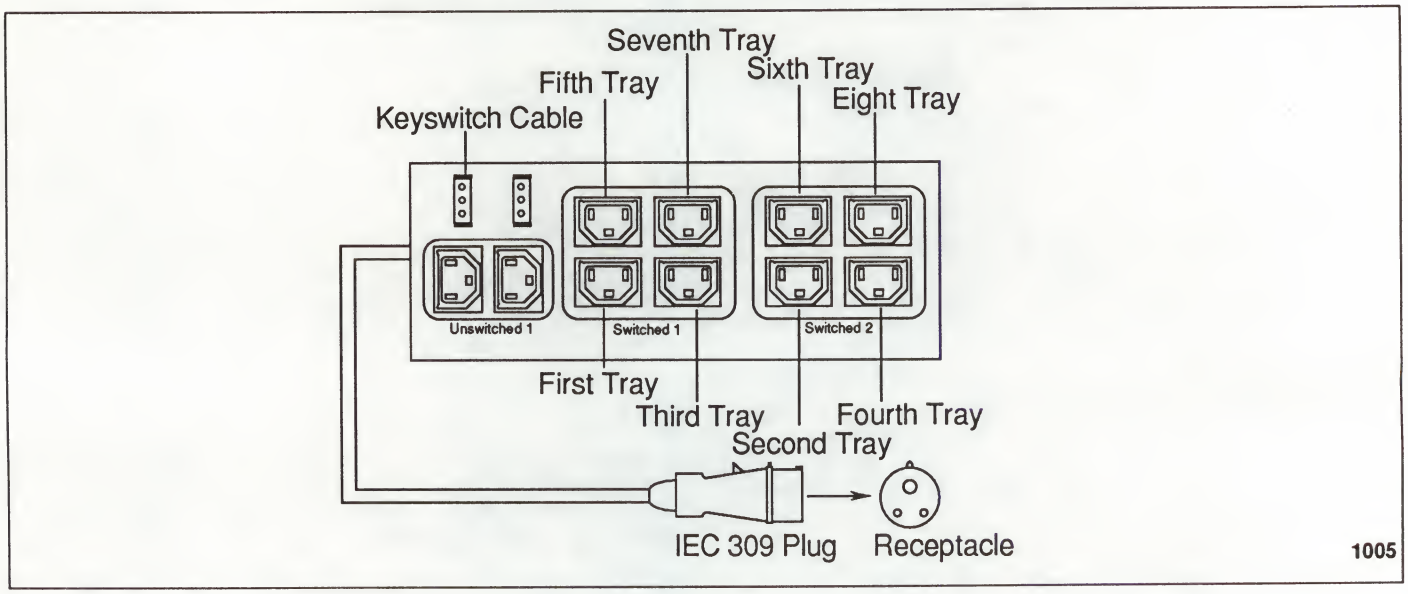

7

Front Panel Installation

7

Front Panel Installation

Each Sun IPI8-1000 1 Gigabyte Disk Drive assembly comes with a *cosmetic* front panel. This panel is packed separately from the drive, to prevent damage during shipping. This panel snaps on the front of the drive assembly, over the operator's touch-pad panel. Refer to Figure 7-1 for an exploded assembly diagram.

Figure 7-1 *Installing the Front Panel on the Drive Assembly*

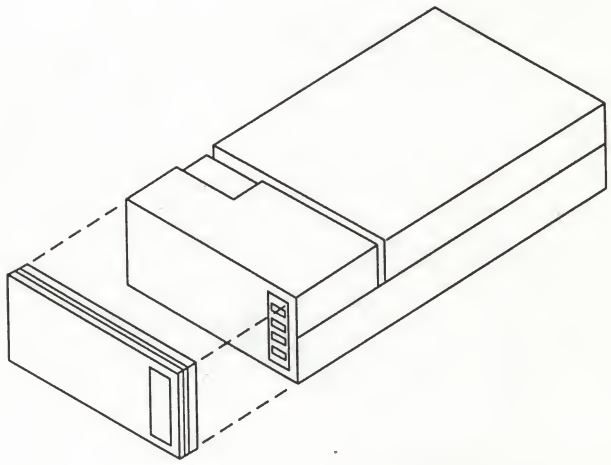

1822

Four large panels cover the front of the Sun 56-inch cabinet. The purpose of these panels is to reduce noise levels and to provide you with an aesthetically

pleasing 56-inch cabinet.

Each of the lower three panels are held in place by four small insertion clasps.

The lowest front panel covers the front of the two bottom-most disk drive tray assemblies. To remove this panel, carefully and firmly pull the panel straight out from the 56-inch cabinet. To reinstall this panel, carefully line up the four small insertion knobs along the edge of the panel with the corresponding holes in the 56-inch cabinet. Push the panel straight in. The other two lower panels can be installed and removed the same way. The top-most panel does not need to be removed, and cannot be removed the same way. This panel swings open on hinges. To open this panel, pull gently but firmly on the left side of this panel. Refer to Figure 7-2.

Figure 7-2 *Installing a Front Panel on the Sun 56-Inch Cabinet*

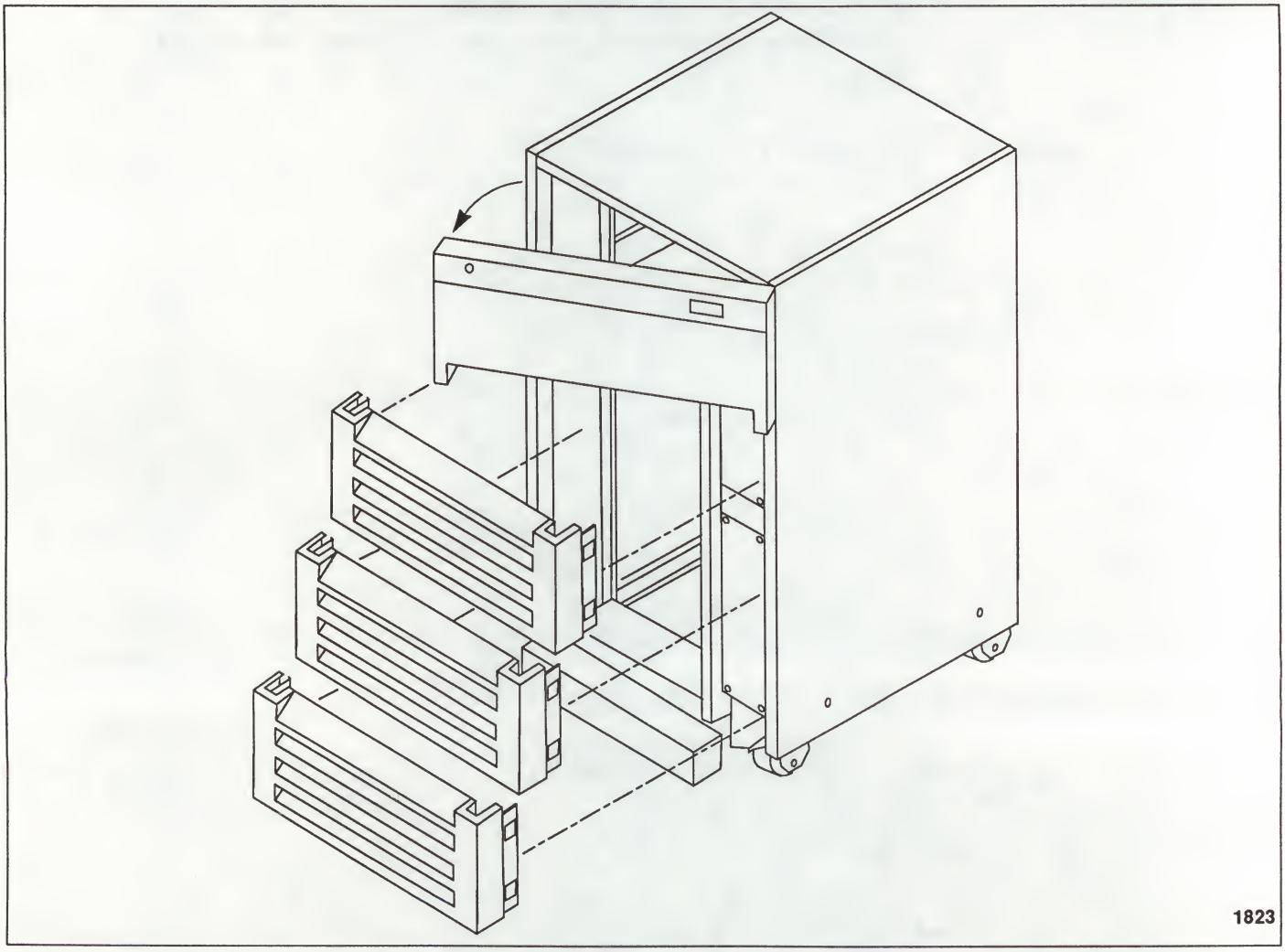

8

Power-Up and Use of Diagnostics

8

Power-Up and Use of Diagnostics

8.1. Power-Up in Sun 56-Inch Cabinet with Power Controller

CAUTION **Sun IPI8-1000 1 Gigabyte disk drives must be used in 208/240-volt (V3 or V4 option) 56-inch cabinet.**

Sun Microsystems does not recommend or support the act or concept of having non-56-inch cabinet mounted devices plugged into the power controller/sequencer that is mounted to the rear of the 56-inch cabinet.

1. Verify that all of the 56-inch cabinet's components are plugged into the power sequencer.
2. The 230/240-volt power sequencer has eight outlets arranged in two square blocks of four outlets each. If there are four disk drives in the 56-inch cabinet, be sure that the AC line cords for the four drives are evenly divided between the two blocks of outlets. For example, if you have four drives, two disk drive AC line cords should be plugged into the left block of outlets (*Switched 1*) and two disk drive AC line cords should be plugged into the right block of outlets (*Switched 2*).
3. Ensure that the 56-inch cabinet's front panel key switch is in the OFF (vertical) position.
4. Ensure that the ganged main power switch on the power sequencer (on rear of 56-inch cabinet) is in the OFF (right) position.
5. Ensure that the Remote/Local switch on the power sequencer is in the REMOTE position.
6. Ensure that the power sequencer is plugged into a properly rated AC wall outlet.
7. Verify that the power switches of all the 56-inch cabinet's components are in the ON position, and that the start switch on the disk drive(s) is in the START position.

NOTE *If necessary, refer to the* Installation Manual for the Sun 56-inch Cabinet, *or the component manuals for switch locations.*

9. Turn ON the ganged main power switch on the power sequencer (up position).

10. Turn the 56-inch cabinet's front panel key switch to the ON (horizontal) position. The host system will wait for the drive to become ready before continuing to boot.

NOTE *The disk drive is equipped with an automatic shipping lock. When power is provided to the drive, it will automatically unlock. There is no need to open the 56-inch cabinet to unlock the disk drive.*

NOTE *A power-up diagnostic runs at power-on time. If it passes with no errors, then the front panel FAULT LED will go out after about 5 seconds. The START switch is automatically activated at power-on, and will flash while the drive spins up. The READY indicator in the START switch will be solid ON when the drive is ready for operation.*

8.2. Use of Diagnostics - Software release 4.0.3 (Sun-4)

CAUTION **SunOS release 4.0.3 with the SPARC 4/390 Feature Tape (or a more recent version of SunOS) *must* be used. Use of these drives with previous software releases will cause serious program execution errors.**

The disk drive is formatted and labeled at the factory; therefore, you need not perform the actions described here. However, if you wish to verify correct operation of the disk drive, you may use the format utility. Please refer to the "Disk Maintenance" chapter in the manual *System Administration for the Sun Workstation* that came with your software release for information on how to access and use the format disk utility.

When using the software specified in the CAUTION above, the format utility will prompt you for answers to parameter inquiries. Give the following answers to the following two prompts:

Controller:	Choose **2 - IPI**
Drive:	Choose **6 - IPI**

9

Troubleshooting

9

Troubleshooting

This chapter provides information concerning the most common installation problems. Sun Microsystems has engineered this product for ease of installation and use. The possibility of damage during shipping or installation is extremely small; therefore, if you experience problems with your disk drive after installation, check your installation for the following basic items.

1. Is the disk drive plugged into a live AC wall outlet (or power controller for drives installed in Sun 56-inch cabinet)? This may seem elementary, but it is certainly worth checking.
2. Did you turn on the Start switch on the disk drive's front operator panel? (For drives installed in Sun 56-inch cabinet, reverify the steps in Section 8.1).
3. Did you turn on the host system power switch?
4. Check all cable connections:
   a. Check that during cable installation none of the connector pins were pushed back into the connector housings causing an intermittent or nonexistent connection.
   b. Did you screw down all cable connectors that have screws? If you did not, the cable shield will not be properly grounded and/or the cable connectors can become dislodged.
6. Recheck cable routing: are all cables going to their appropriate connectors?
7. Did you insert the disk drive controller board into the appropriate slot in your host system card cage?
8. Recheck the disk drive controller board configuration and the backplane jumpers. Note that if the placement of other boards within the host system card cage was changed to make room for the disk drive controller board, then the slots that those boards were moved to must also be checked for correct backplane jumpering.
9. Verify that the switches on the drive are set correctly. (Refer to the *IPI8-1000 1 Gigabyte Disk Drive Configuration Procedures*.)

If all of the above checks have been made and the system is still not functioning properly, call your local Sun Microsystems sales or field service representative.

Revision History

Dash Number	*Revision*	*Date*	*Comments*
01	**01**	15 February 1989	Review Draft
02	**01**	27 March 1989	Alpha Review
03	**01**	17 April 1989	Alpha Review
05	**50**	9 June 1989	Beta Review
06	**50**	28 August 1989	Review Draft
10	**A**	26 September 1989	First Customer Shipment

Corporate Headquarters
Sun Microsystems, Inc.
2550 Garcia Avenue
Mountain View, CA 94043
415 960-1300
TLX 37-29639

For U.S. Sales Office locations, call:
800 821-4643
In CA: 800 821-4642

European Headquarters
Sun Microsystems Europe, Inc.
Bagshot Manor, Green Lane
Bagshot, Surrey GU19 5NL
England
0276 51440
TLX 859017

Australia: (02) 413 2666
Canada: 416 477-6745
France: (1) 40 94 80 00
Germany: (089) 95094-0
Hong Kong: 852 5-8651688
Italy: (39) 6056337
Japan: (03) 221-7021
Korea: 2-7802255
Nordic Countries: +46 (0)8 7647810
PRC: 1-8315568
Singapore: 224 3388
Spain: (1) 2532003
Switzerland: (1) 8289555
The Netherlands: 3133501234
Taiwan: 2-7213257
UK: 0276 62111

Europe, Middle East, and Africa, call European Headquarters:
0276 51440

Elsewhere in the world, call Corporate Headquarters:
415 960-1300
Intercontinental Sales